Hylectric Machines and Tracer Robots

900 - 10 000 kN Machine Specifications

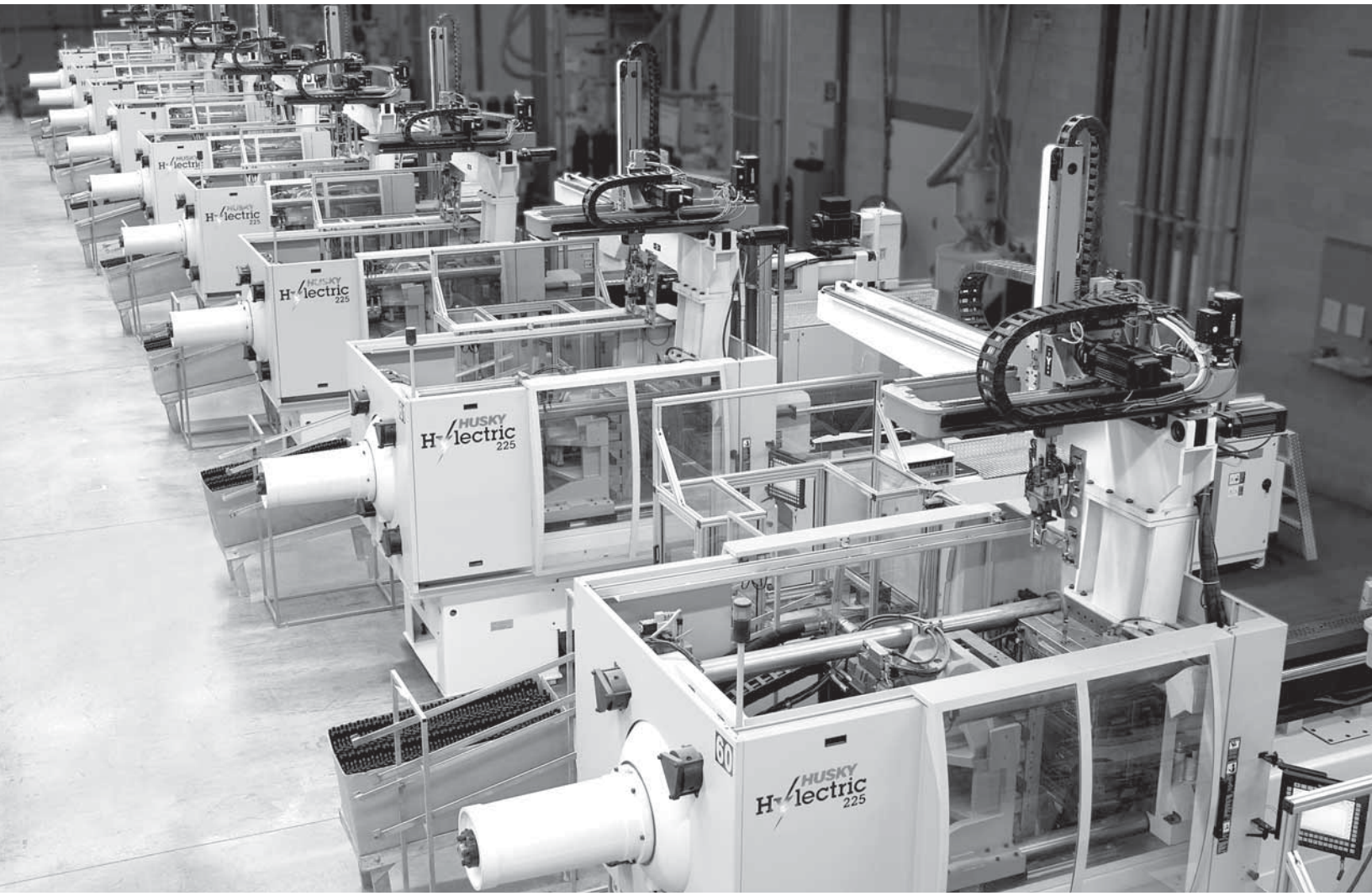

HUSKY

Keeping our customers in the lead

90 - 1000 tonnes

	RS22	RS28	RS35	RS40	RS45	RS55	RS65	RS80	RS95	RS115	RS135	RS155
Working Capacity	65	122	249	356	582	1 021	1 696	2 733	4 880	7 900	13 800	19 900
H90	✓	✓	✓	✓	✓	✓						
H(L)120	✓	✓	✓	✓	✓	✓						
H(L)160			✓	✓	✓	✓						
H(L)225					✓	✓	✓	✓				
H(L)300					✓	✓	✓	✓	✓			
H(L)400						✓	✓	✓	✓	✓		
H(L)500							✓	✓	✓	✓		
H(L)650								✓	✓	✓	✓	
H(L)800								✓	✓	✓	✓	✓
H(L)1000									✓	✓	✓	✓

Note:
Non-standard combinations can be quoted.

As part of our continuing commitment to innovation, some specifications may vary from the time of this printing.

H90, H120

Clamp		H90, H120	HL120
Clamp Force	kN	900, 1200	1200
Tiebar Spacing (H x V)	mm	500 x 500	500 x 500
Platen Size (H x V)	mm	730 x 730	730 x 730
Clamp Stroke(1)	mm	365 / 700	565 / 950
Shutheight (Min-Max)(2)	mm	220 / 555	370 / 755
Shutheight with Stack Carrier (Min / Max)(8)	mm	360 / 555	370 / 755
Daylight	mm	920	1320
Ejector Stroke	mm	150	150
Ejector Force	kN	50	50
Tiebar Diameter	mm	80	80
Dry Cycle(3)	s	1.6	1.8
E6 Cycle Time Contribution(4)	s	1.2	1.2

RS Injection Model		RS22			RS28			RS35		
Working Capacity			65			122			249	
Screw Diameter	mm	18	20	22	22	25	28	28	32	35
Screw L/D(5)		25.0	25.1	22.6	24.9	25.1	22.2	25.1	25.0	22.7
Injection Pressure	bar	2570	2080	1720	2560	1980	1580	2530	1940	1620
Injection Stroke	mm	100	100	100	125	125	125	160	160	160
Injection Capacity	cm^3	25	31	38	48	61	77	99	129	154
Barrel Heat Power	kW	3.6	4.2	4.2	4.2	5.4	5.4	6.6	8.4	8.4
Barrel Control Zones(6)		3	3	3	3	3	3	3	3	3
Accumulator Assist Injection Rate(7)	cm^3/s	202	249	302	202	262	328	205	268	320
High Speed Accumulator Assist Injection Rate (7),(8)	cm^3/s	709	876	1060	712	920	1154	721	941	1126
Carriage Force	kN	55	55	55	55	55	55	55	55	55
Melt Channel Diameter	mm	10	10	10	10	10	10	10	10	10
Standard Screw Drive(9)										
Screw Speed	rpm	1061	955	868	868	764	682	682	597	546
Screw Peripheral Speed	m/s	1.00	1.00	1.00	1.00	1.00	1.00	1.00	1.00	1.00
Screw Torque	Nm	43	57	74	74	104	141	141	203	258
High Torque Screw Drive(8) (9)										
Screw Speed	rpm	690	621	564	564	497	443	443	388	355
Screw Peripheral Speed	m/s	0.65	0.65	0.65	0.65	0.65	0.65	0.65	0.65	0.65
Screw Torque	Nm	67	88	114	114	162	219	219	315	401
High Power Screw Drive(8) (9)										
Screw Speed	rpm	849	764	694	694	611	546	546	477	437
Screw Peripheral Speed	m/s	0.80	0.80	0.80	0.80	0.80	0.80	0.80	0.80	0.80
Screw Torque	Nm	67	88	114	114	162	219	219	315	401
High Speed Screw Drive(8) (9)										
Screw Speed	rpm	1326	1194	1085	1085	955	853	853	746	682
Screw Peripheral Speed	m/s	1.25	1.25	1.25	1.25	1.25	1.25	1.25	1.25	1.25
Screw Torque	Nm	43	57	74	74	104	141	141	203	258
Overall Machine Specifications										
Oil Volume	l		650			650			650	
Overall Width x Height	mm	1529	x	2320	1529	x	2320	1529	x	2320
Overall Length H/HL	mm	5611	/	6261	5611	/	6261	5629	/	6279
Overall Weight H/HL	t	6.8	/	6.8	6.8	/	6.8	6.8	/	6.8

Notes:
(1) Available stroke at maximum shutheight / maximum stroke at minimum shutheight.
(2) Minimum shutheight is increased with optional stack mold carrier installed.
(3) 100% speed, 100% clamp force using available stroke at maximum shutheight.
(4) Dry cycle performance according to the Euromap 6 standard (www.euromap.org).
(5) Special screw L/D's are available.
(6) Additional zones provided for barrel head, nozzle adapter, and optional shut-off head.
(7) Instantaneous injection rate at 2/3 of maximum available plastic pressure up to 30% injection stroke.
(8) Requires optional equipment.
(9) Please consult Husky for the ideal drive, screw design and plasticizing performance for your application.

Specifications are subject to change without notice
n.a. = not available

Euromap Moving Platen

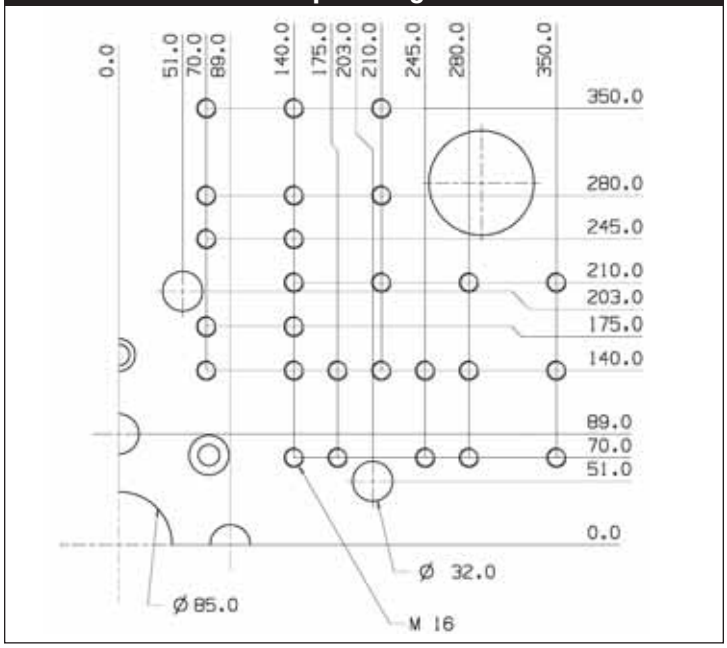

Euromap Stationary Platen

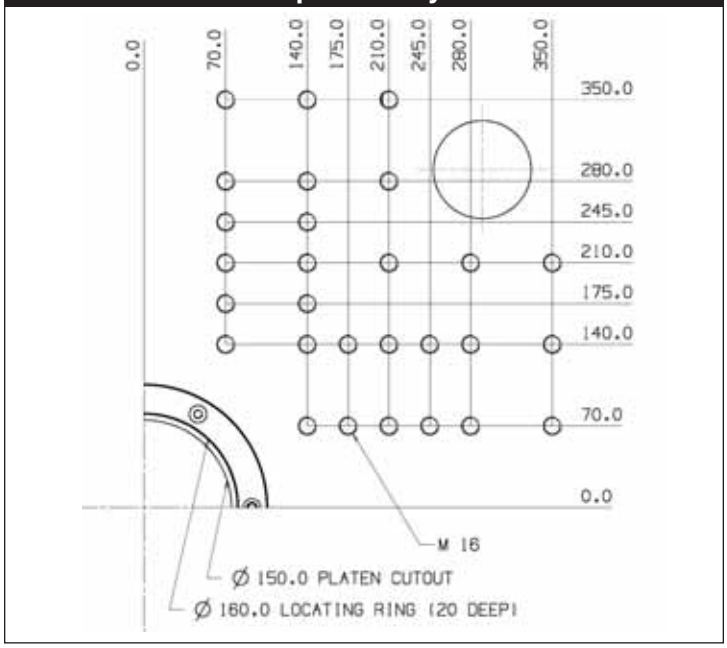

SPI Moving Platen

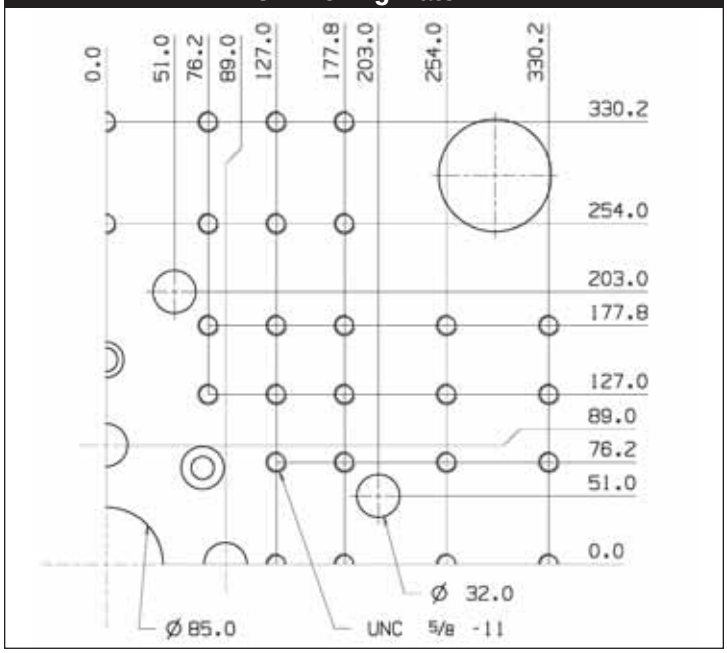

SPI Stationary Platen

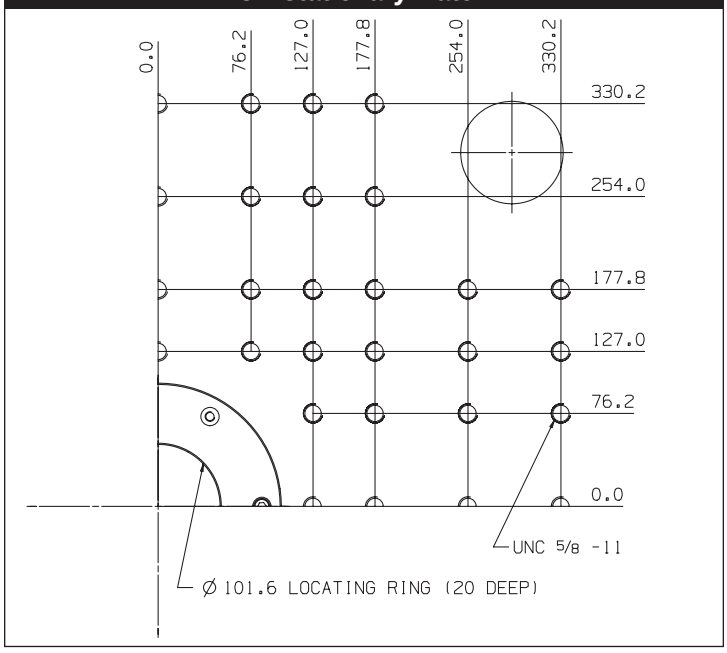

Notes: All dimensions are in [mm].

H90, H120

Clamp		H90, H120	HL120
Clamp Force	kN	900, 1200	1200
Tiebar Spacing (H x V)	mm	500 x 500	500 x 500
Platen Size (H x V)	mm	730 x 730	730 x 730
Clamp Stroke(1)	mm	365 / 700	565 / 950
Shutheight (Min-Max)(2)	mm	220 / 555	370 / 755
Shutheight with Stack Carrier (Min / Max)(8)	mm	360 / 555	370 / 755
Daylight	mm	920	1320
Ejector Stroke	mm	150	150
Ejector Force	kN	50	50
Tiebar Diameter	mm	80	80
Dry Cycle(3)	s	1.6	1.8
E6 Cycle Time Contribution(4)	s	1.2	1.2

RS Injection Model		RS40			RS45			RS55		
Working Capacity			356			582			1021	
Screw Diameter	mm	32	35	40	38	42	45	45	50	55
Screw L/D(5)		25.0	25.0	21.7	25.0	25.0	23.2	25.0	25.0	22.6
Injection Pressure	bar	2530	2120	1620	2440	2000	1740	2570	2080	1720
Injection Stroke	mm	175	175	175	210	210	210	250	250	250
Injection Capacity	cm^3	141	168	220	238	291	334	398	491	594
Barrel Heat Power	kW	9.0	10.8	10.8	13.2	14.4	14.4	17.6	21.6	21.6
Barrel Control Zones(6)		3	3	3	3	3	3	4	4	4
Accumulator Assist Injection Rate(7)	cm^3/s	777	929	1215	805	984	1129	765	945	1144
High Speed Accumulator Assist Injection Rate (7),(8)	cm^3/s	1349	1614	2110	1399	1709	1961	1329	1642	1987
Carriage Force	kN	55	55	55	80	80	80	80	80	80
Melt Channel Diameter	mm	10	10	10	14	14	14	14	14	14
Standard Screw Drive(9)										
Screw Speed	rpm	597	546	477	503	455	424	424	382	347
Screw Peripheral Speed	m/s	1.00	1.00	1.00	1.00	1.00	1.00	1.00	1.00	1.00
Screw Torque	Nm	203	258	371	323	423	509	509	677	876
High Torque Screw Drive(8) (9)										
Screw Speed	rpm	388	355	310	327	296	276	276	248	226
Screw Peripheral Speed	m/s	0.65	0.65	0.65	0.65	0.65	0.65	0.65	0.65	0.65
Screw Torque	Nm	315	401	575	501	656	790	790	1050	1358
High Power Screw Drive(8) (9)										
Screw Speed	rpm	477	437	382	402	364	340	340	306	278
Screw Peripheral Speed	m/s	0.80	0.80	0.80	0.80	0.80	0.80	0.80	0.80	0.80
Screw Torque	Nm	315	401	575	501	656	790	790	1050	1358
High Speed Screw Drive(8) (9)										
Screw Speed	rpm	746	682	597	628	568	531	531	477	434
Screw Peripheral Speed	m/s	1.25	1.25	1.25	1.25	1.25	1.25	1.25	1.25	1.25
Screw Torque	Nm	203	258	371	323	423	509	509	677	876
Overall Machine Specifications										
Oil Volume	l		675			675			675	
Overall Width x Height	mm	1529	x	2320	1529	x	2320	1529	x	2470
Overall Length H/HL	mm	5831	/	6481	6186	/	6836	7025	/	7675
Overall Weight H/HL	t	7.1	/	7.1	8.1	/	8.1	9.4	/	9.4

Notes:
(1) Available stroke at maximum shutheight / maximum stroke at minimum shutheight.
(2) Minimum shutheight is increased with optional stack mold carrier installed.
(3) 100% speed, 100% clamp force using available stroke at maximum shutheight.
(4) Dry cycle performance according to the Euromap 6 standard (www.euromap.org).
(5) Special screw L/D's are available.
(6) Additional zones provided for barrel head, nozzle adapter, and optional shut-off head.
(7) Instantaneous injection rate at 2/3 of maximum available plastic pressure up to 30% injection stroke.
(8) Requires optional equipment.
(9) Please consult Husky for the ideal drive, screw design and plasticizing performance for your application.

Specifications are subject to change without notice
n.a. = not available

Euromap Moving Platen

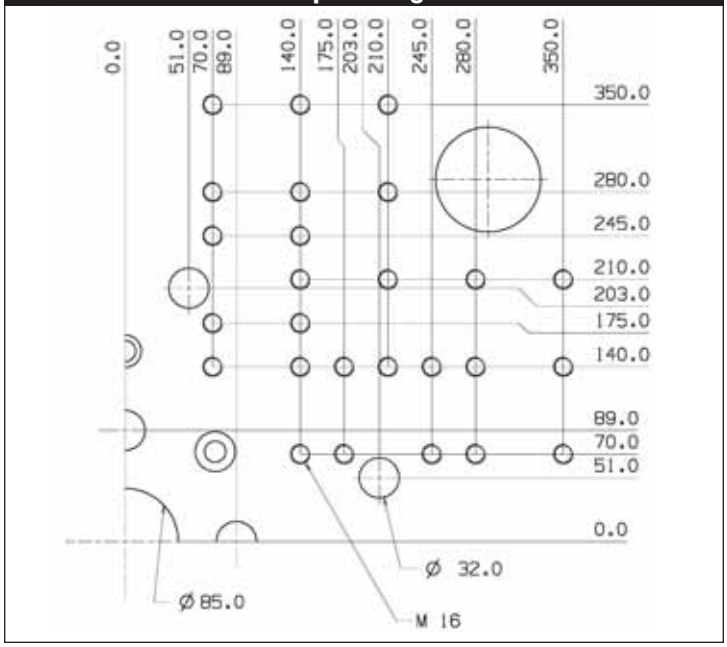

Euromap Stationary Platen

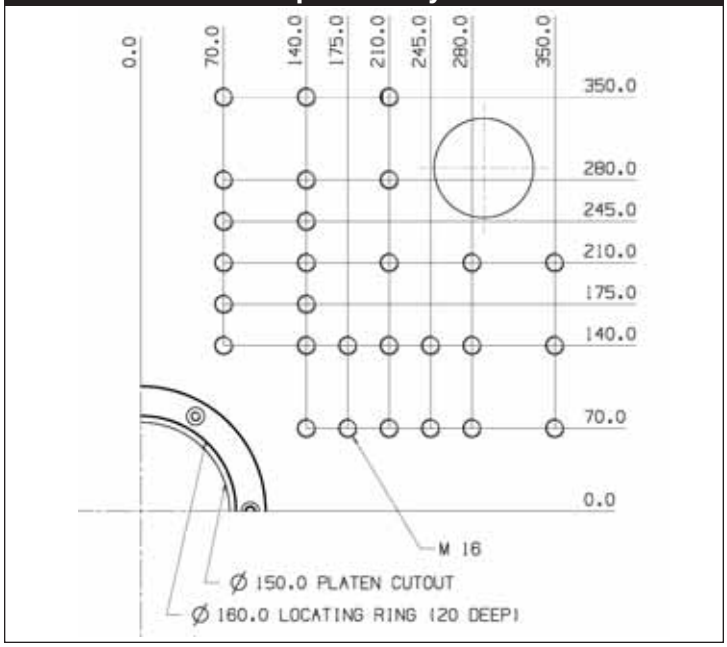

SPI Moving Platen

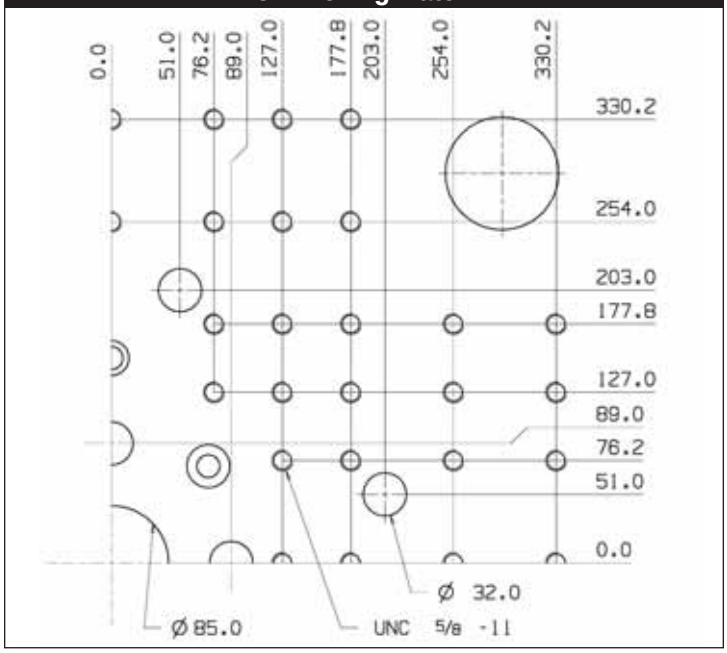

SPI Stationary Platen

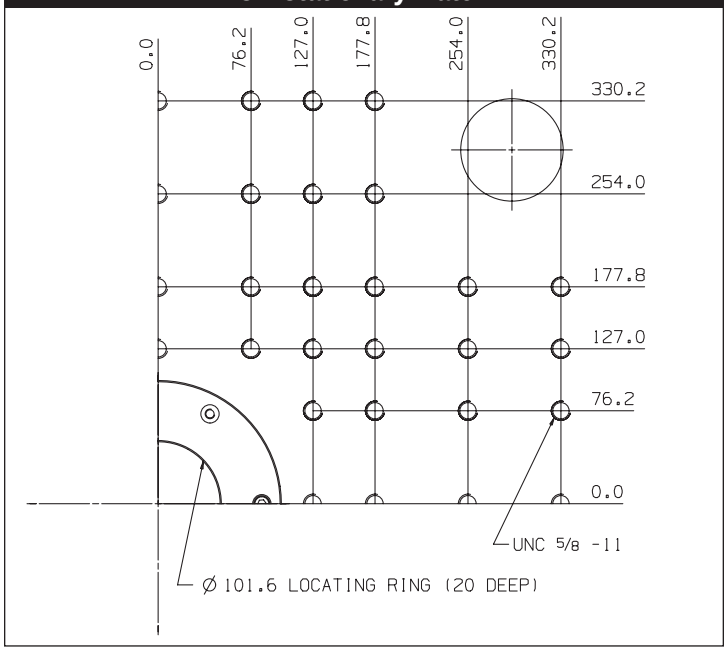

Notes: All dimensions are in [mm].

H160

Clamp		H160	HL160
Clamp Force	kN	1600	1600
Tiebar Spacing (H x V)	mm	560 x 560	560 x 560
Platen Size (H x V)	mm	820 x 820	820 x 820
Clamp Stroke(1)	mm	400 / 750	590 / 1000
Shutheight (Min-Max)(2)	mm	250 / 600	400 / 810
Shutheight with Stack Carrier (Min / Max)(8)	mm	414 / 600	414 / 810
Daylight	mm	1000	1400
Ejector Stroke	mm	150	150
Ejector Force	kN	50	50
Tiebar Diameter	mm	95	95
Dry Cycle(3)	s	1.9	2.0
E6 Cycle Time Contribution(4)	s	1.4	1.4

RS Injection Model		RS35			RS40			RS45			RS55		
Working Capacity			249			356			582			1021	
Screw Diameter	mm	28	32	35	32	35	40	38	42	45	45	50	55
Screw L/D(5)		25.1	25.0	22.7	25.0	25.0	21.7	25.0	25.0	23.2	25.0	25.0	22.6
Injection Pressure	bar	2530	1940	1620	2530	2120	1620	2440	2000	1740	2570	2080	1720
Injection Stroke	mm	160	160	160	175	175	175	210	210	210	250	250	250
Injection Capacity	cm^3	99	129	154	141	168	220	238	291	334	398	491	594
Barrel Heat Power	kW	6.6	8.4	8.4	9.0	10.8	10.8	13.2	14.4	14.4	17.6	21.6	21.6
Barrel Control Zones(6)		3	3	3	3	3	3	3	3	3	4	4	4
Accumulator Assist Injection Rate(7)	cm^3/s	205	268	320	777	929	1215	805	984	1129	765	945	1144
High Speed Accumulator Assist Injection Rate (7),(8)	cm^3/s	721	941	1126	1349	1614	2110	1399	1709	1961	1329	1642	1987
Carriage Force	kN	55	55	55	55	55	55	80	80	80	80	80	80
Melt Channel Diameter	mm	10	10	10	10	10	10	14	14	14	14	14	14
Standard Screw Drive(9)													
Screw Speed	rpm	682	597	546	597	546	477	503	455	424	424	382	347
Screw Peripheral Speed	m/s	1.00	1.00	1.00	1.00	1.00	1.00	1.00	1.00	1.00	1.00	1.00	1.00
Screw Torque	Nm	141	203	258	203	258	371	323	423	509	509	677	876
High Torque Screw Drive(8) (9)													
Screw Speed	rpm	443	388	355	388	355	310	327	296	276	276	248	226
Screw Peripheral Speed	m/s	0.65	0.65	0.65	0.65	0.65	0.65	0.65	0.65	0.65	0.65	0.65	0.65
Screw Torque	Nm	219	315	401	315	401	575	501	656	790	790	1050	1358
High Power Screw Drive(8) (9)													
Screw Speed	rpm	546	477	437	477	437	382	402	364	340	340	306	278
Screw Peripheral Speed	m/s	0.80	0.80	0.80	0.80	0.80	0.80	0.80	0.80	0.80	0.80	0.80	0.80
Screw Torque	Nm	219	315	401	315	401	575	501	656	790	790	1050	1358
High Speed Screw Drive(8) (9)													
Screw Speed	rpm	853	746	682	746	682	597	628	568	531	531	n.a.	434
Screw Peripheral Speed	m/s	1.25	1.25	1.25	1.25	1.25	1.25	1.25	1.25	1.25	1.25	n.a.	1.25
Screw Torque	Nm	141	203	258	203	258	371	323	423	509	509	n.a.	876
Overall Machine Specifications													
Oil Volume	l		650			675			675			675	
Overall Width x Height	mm	1594	x	2320	1594	x	2320	1594	x	2470	1594	x	2470
Overall Length H/HL	mm	5783	/	6435	5985	/	6637	6340	/	6992	7179	/	7831
Overall Weight H/HL	t	8.6	/	8.6	9.1	/	9.3	9.1	/	9.3	9.1	/	9.3

Notes:
(1) Available stroke at maximum shutheight / maximum stroke at minimum shutheight.
(2) Minimum shutheight is increased with optional stack mold carrier installed.
(3) 100% speed, 100% clamp force using available stroke at maximum shutheight.
(4) Dry cycle performance according to the Euromap 6 standard (www.euromap.org).
(5) Special screw L/D's are available.
(6) Additional zones provided for barrel head, nozzle adapter, and optional shut-off head.
(7) Instantaneous injection rate at 2/3 of maximum available plastic pressure up to 30% injection stroke.
(8) Requires optional equipment.
(9) Please consult Husky for the ideal drive, screw design and plasticizing performance for your application.

Specifications are subject to change without notice
n.a. = not available

Euromap Moving Platen

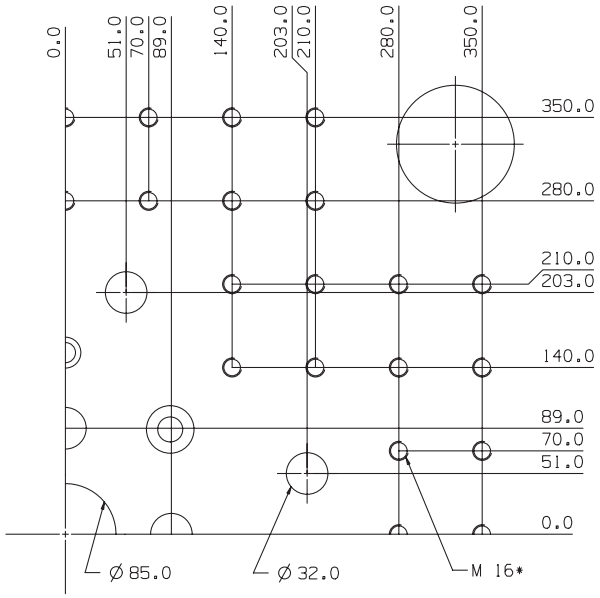

Euromap Stationary Platen

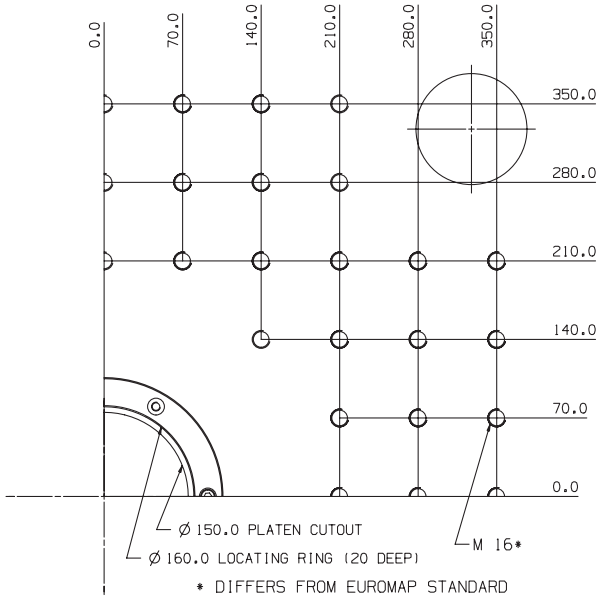

SPI Moving Platen

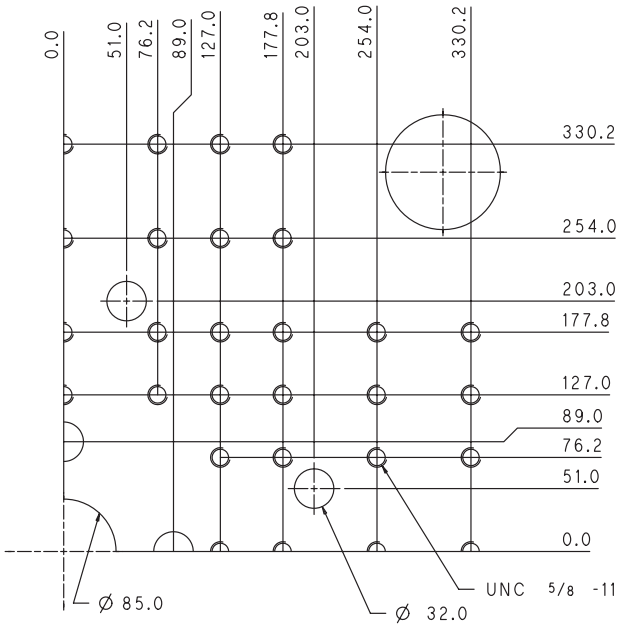

SPI Stationary Platen

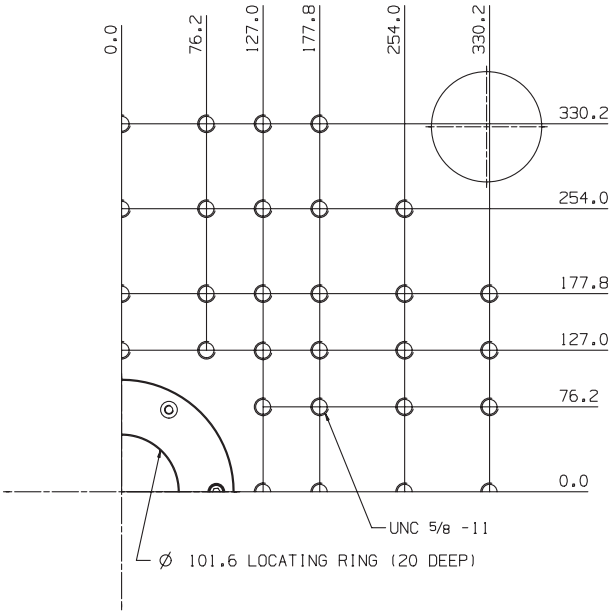

Notes: All dimensions are in [mm].

H225

Clamp		H225	HL225
Clamp Force	kN	2250	2250
Tiebar Spacing (H x V)	mm	660 x 660	660 x 660
Platen Size (H x V)	mm	950 x 950	950 x 950
Clamp Stroke(1)	mm	540 / 920	725 / 1200
Shutheight (Min-Max)(2)	mm	280 / 660	450 / 925
Shutheight with Stack Carrier (Min / Max)(8)	mm	400 / 660	450 / 925
Daylight	mm	1200	1650
Ejector Stroke	mm	150	150
Ejector Force	kN	73	73
Tiebar Diameter	mm	110	110
Dry Cycle(3)	s	2.2	2.4
E6 Cycle Time Contribution(4)	s	1.6	1.6

RS Injection Model		RS45			RS55			RS65			RS80		
Working Capacity			582			1021			1696			2733	
Screw Diameter	mm	38	42	45	45	50	55	55	60	65	65	70	80
Screw L/D(5)		25.0	25.0	23.2	25.0	25.0	22.6	25.0	25.0	22.9	27.1	25.0	21.7
Injection Pressure	bar	2440	2000	1740	2570	2080	1720	2380	2000	1700	2350	2030	1550
Injection Stroke	mm	210	210	210	250	250	250	300	300	300	350	350	350
Injection Capacity	cm^3	238	291	334	398	491	594	713	848	995	1161	1347	1759
Barrel Heat Power	kW	13.2	14.4	14.4	17.6	21.6	21.6	27.2	27.2	27.2	42.0	42.0	42.0
Barrel Control Zones(6)		3	3	3	4	4	4	4	4	4	5	5	5
Accumulator Assist Injection Rate(7)	cm^3/s	805	984	1129	765	945	1144	827	984	1154	1568	1819	2376
High Speed Accumulator Assist Injection Rate (7),(8)	cm^3/s	1399	1709	1961	1329	1642	1987	1436	1709	2005	n.a.	n.a.	n.a.
Carriage Force	kN	80	80	80	80	80	80	80	80	80	120	120	120
Melt Channel Diameter	mm	14	14	14	14	14	14	14	14	14	22	22	22
Standard Screw Drive(9)													
Screw Speed	rpm	503	455	424	424	382	347	347	318	294	294	273	239
Screw Peripheral Speed	m/s	1.00	1.00	1.00	1.00	1.00	1.00	1.00	1.00	1.00	1.00	1.00	1.00
Screw Torque	Nm	323	423	509	509	677	876	876	1108	1375	1375	1660	2409
High Torque Screw Drive(8) (9)													
Screw Speed	rpm	327	296	276	276	248	226	226	207	191	191	177	155
Screw Peripheral Speed	m/s	0.65	0.65	0.65	0.65	0.65	0.65	0.65	0.65	0.65	0.65	0.65	0.65
Screw Torque	Nm	501	656	790	790	1050	1358	1358	1718	2132	2132	2605	3736
High Power Screw Drive(8) (9)													
Screw Speed	rpm	402	364	340	340	306	278	278	255	235	235	218	191
Screw Peripheral Speed	m/s	0.80	0.80	0.80	0.80	0.80	0.80	0.80	0.80	0.80	0.80	0.80	0.80
Screw Torque	Nm	501	656	790	790	1050	1358	1358	1718	2132	2132	2605	3736
High Speed Screw Drive(8) (9)													
Screw Speed	rpm	628	568	531	531	n.a.	434	469	430	397	397	368	322
Screw Peripheral Speed	m/s	1.25	1.25	1.25	1.25	n.a.	1.25	1.35	1.35	1.35	1.35	1.35	1.35
Screw Torque	Nm	323	423	509	509	n.a.	876	876	1108	1273	1273	1680	2158
Overall Machine Specifications													
Oil Volume	l		850			850			850			1150	
Overall Width x Height	mm	1898	x	2470	1898	x	2460	1881	x	2470	2017	x	2520
Overall Length H/HL	mm	6871	/	7594	7620	/	8343	8233	/	8956	8690	/	9413
Overall Weight H/HL	t	13	/	13	14	/	14	15	/	15	15	/	15

Notes:
(1) Available stroke at maximum shutheight / maximum stroke at minimum shutheight.
(2) Minimum shutheight is increased with optional stack mold carrier installed.
(3) 100% speed, 100% clamp force using available stroke at maximum shutheight.
(4) Dry cycle performance according to the Euromap 6 standard (www.euromap.org).
(5) Special screw L/D's are available.
(6) Additional zones provided for barrel head, nozzle adapter, and optional shut-off head.
(7) Instantaneous injection rate at 2/3 of maximum available plastic pressure up to 30% injection stroke.
(8) Requires optional equipment.
(9) Please consult Husky for the ideal drive, screw design and plasticizing performance for your application.

Specifications are subject to change without notice
n.a. = not available

Euromap Moving Platen

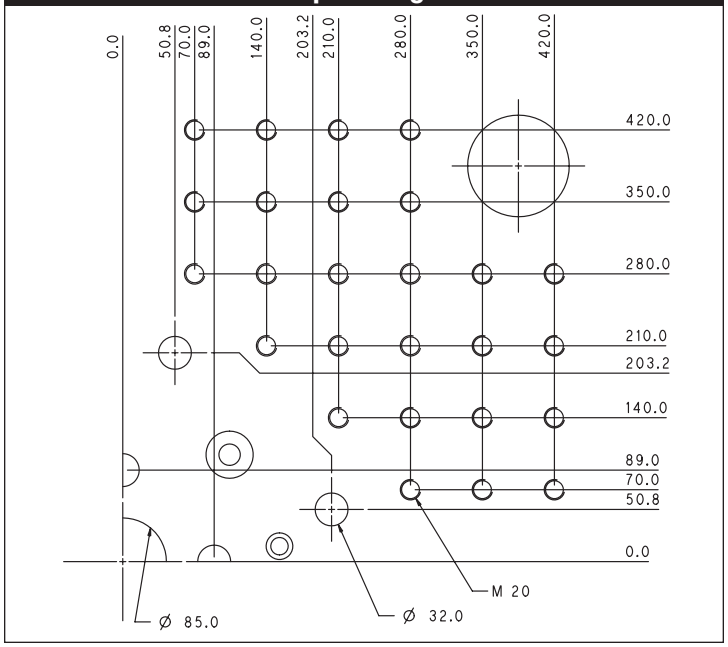

Euromap Stationary Platen

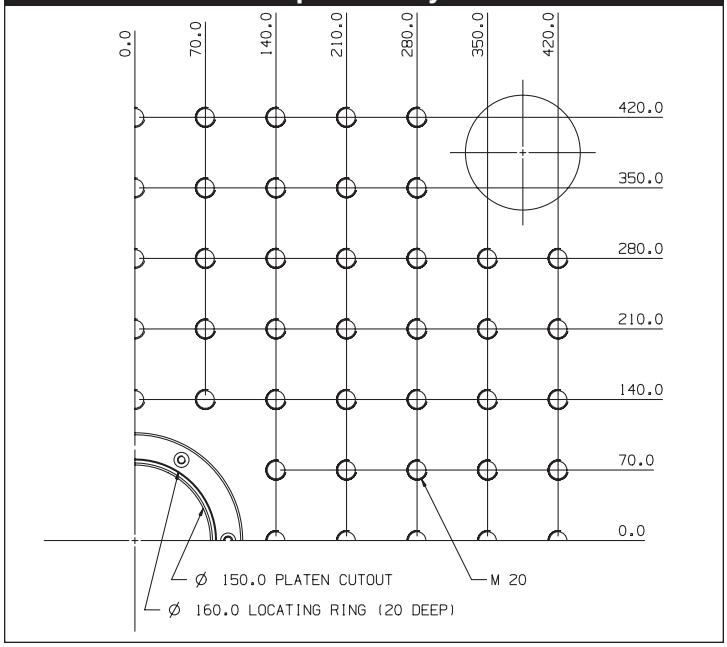

SPI Moving Platen

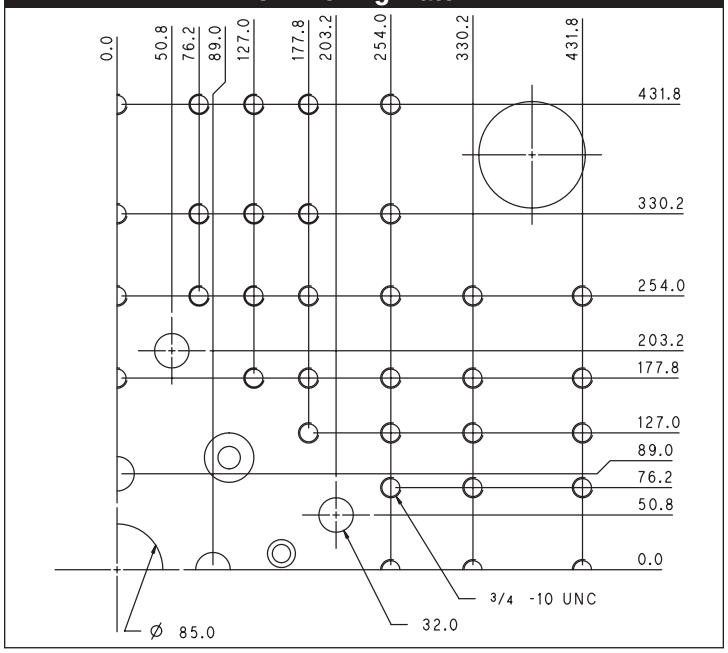

SPI Stationary Platen

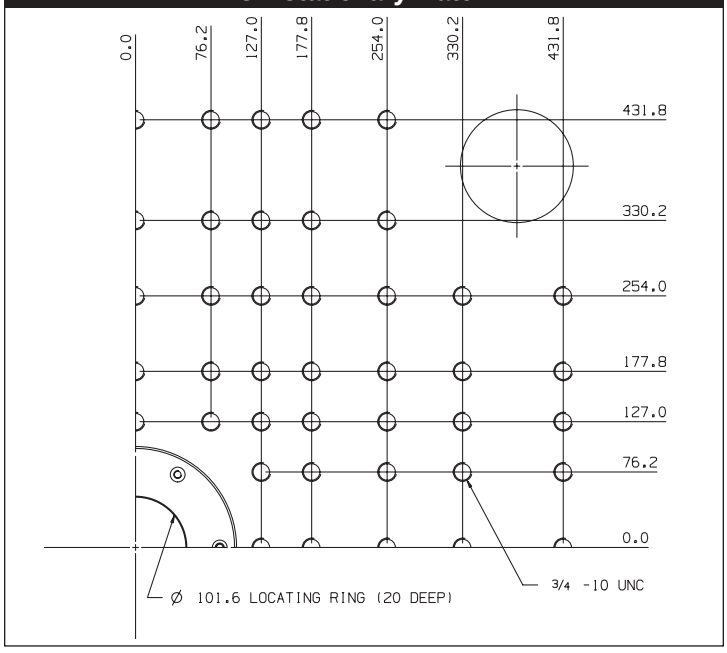

Notes: All dimensions are in [mm].

H300

Clamp		H300	HL300
Clamp Force	kN	3000	3000
Tiebar Spacing (H x V)	mm	780 x 780	780 x 780
Platen Size (H x V)	mm	1080 x 1130	1080 x 1130
Clamp Stroke(1)	mm	600 / 1075	880 / 1420
Shutheight (Min-Max)(2)	mm	300 / 775	480 / 1020
Shutheight with Stack Carrier (Min/Max) (8)	mm	350 / 775	480 / 1020
Daylight	mm	1375	1900
Ejector Stroke	mm	150	150
Ejector Force	kN	73	73
Tiebar Diameter	mm	130	130
Dry Cycle(3)	s	2.4	2.7
E6 Cycle Time Contribution(4)	s	1.8	1.8

RS Injection Model		RS45			RS55			RS65			RS80			RS95		
Working Capacity			582			1021			1696			2733			4880	
Screw Diameter	mm	38	42	45	45	50	55	55	60	65	65	70	80	80	85	95
Screw L/D(5)		25.0	25.0	23.2	25.0	25.0	22.6	25.0	25.0	22.9	27.1	25.0	21.7	26.7	25.0	22.2
Injection Pressure	bar	2440	2000	1740	2570	2080	1720	2380	2000	1700	2350	2030	1550	2280	2020	1620
Injection Stroke	mm	210	210	210	250	250	250	300	300	300	350	350	350	425	425	425
Injection Capacity	cm^3	238	291	334	398	491	594	713	848	995	1161	1347	1759	2136	2412	3012
Barrel Heat Power	kW	13.2	14.4	14.4	17.6	21.6	21.6	27.2	27.2	27.2	42.0	42.0	42.0	57.6	57.6	57.6
Barrel Control Zones(6)		3	3	3	4	4	4	4	4	4	5	5	5	6	6	6
Accumulator Assist Injection Rate(7)	cm^3/s	805	984	1129	765	945	1144	827	984	1154	1568	1819	2376	1615	1824	2278
High Speed Accumulator Assist Injection Rate (6), (7)	cm^3/s	1399	1709	1961	1329	1642	1987	1436	1709	2005	3801	4408	5753	3973	4485	5602
Carriage Force	kN	80	80	80	80	80	80	80	80	80	120	120	120	120	120	120
Melt Channel Diameter	mm	14	14	14	14	14	14	14	14	14	22	22	22	22	22	22
Standard Screw Drive(8)																
Screw Speed	rpm	503	455	424	424	382	347	347	318	294	294	273	239	239	225	201
Screw Peripheral Speed	m/s	1.00	1.00	1.00	1.00	1.00	1.00	1.00	1.00	1.00	1.00	1.00	1.00	1.00	1.00	1.00
Screw Torque	Nm	323	423	509	509	677	876	876	1108	1375	1375	1660	2409	2409	2837	3831
High Torque Screw Drive(7) (8)																
Screw Speed	rpm	327	296	276	276	248	226	226	207	191	191	177	155	155	146	131
Screw Peripheral Speed	m/s	0.65	0.65	0.65	0.65	0.65	0.65	0.65	0.65	0.65	0.65	0.65	0.65	0.65	0.65	0.65
Screw Torque	Nm	501	656	790	790	1050	1358	1358	1718	2132	2132	2605	3736	3736	4400	5941
High Power Screw Drive(7) (8)																
Screw Speed	rpm	402	364	340	340	306	278	278	255	235	235	218	191	191	180	161
Screw Peripheral Speed	m/s	0.80	0.80	0.80	0.80	0.80	0.80	0.80	0.80	0.80	0.80	0.80	0.80	0.80	0.80	0.80
Screw Torque	Nm	501	656	790	790	1050	1358	1358	1718	2132	2132	2605	3736	3736	4400	5941
High Speed Screw Drive(7) (8)																
Screw Speed	rpm	628	568	531	531	n.a.	434	469	430	397	397	368	322	322	303	271
Screw Peripheral Speed	m/s	1.25	1.25	1.25	1.25	n.a.	1.25	1.35	1.35	1.35	1.35	1.35	1.35	1.35	1.35	1.35
Screw Torque	Nm	323	423	509	509	n.a.	876	876	1108	1273	1273	1680	2158	2158	2837	3533
Overall Machine Specifications																
Oil Volume	l		900			900			900			1200			1225	
Overall Width x Height	mm	2015	x	2470	2015	x	2460	1998	x	2470	2134	x	2520	2134	x	2520
Overall Length H/HL	mm	7253	/	8117	8002	/	8866	8615	/	9479	9072	/	9936	9859	/	10723
Overall Weight H/HL	t	16	/	17	17	/	18	19	/	19	21	/	22	22	/	23

Notes:
(1) Available stroke at maximum shutheight / maximum stroke at minimum shutheight.
(2) Minimum shutheight is increased with optional stack mold carrier installed.
(3) 100% speed, 100% clamp force using available stroke at maximum shutheight.
(4) Dry cycle performance according to the Euromap 6 standard (www.euromap.org).
(5) Special screw L/D's are available.
(6) Additional zones provided for barrel head, nozzle adapter, and optional shut-off head.
(7) Instantaneous injection rate at 2/3 of maximum available plastic pressure up to 30% injection stroke.
(8) Requires optional equipment.
(9) Please consult Husky for the ideal drive, screw design and plasticizing performance for your application.

Specifications are subject to change without notice
n.a. = not available

Euromap Moving Platen

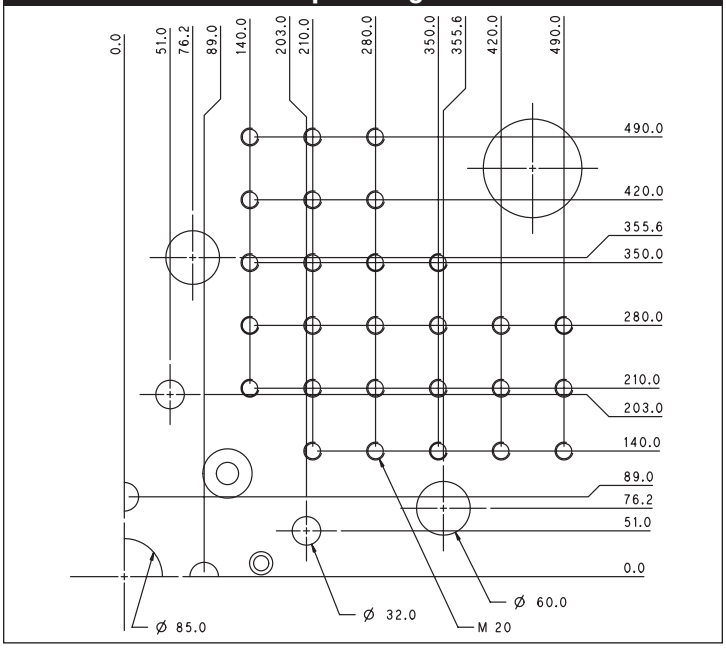

Euromap Stationary Platen

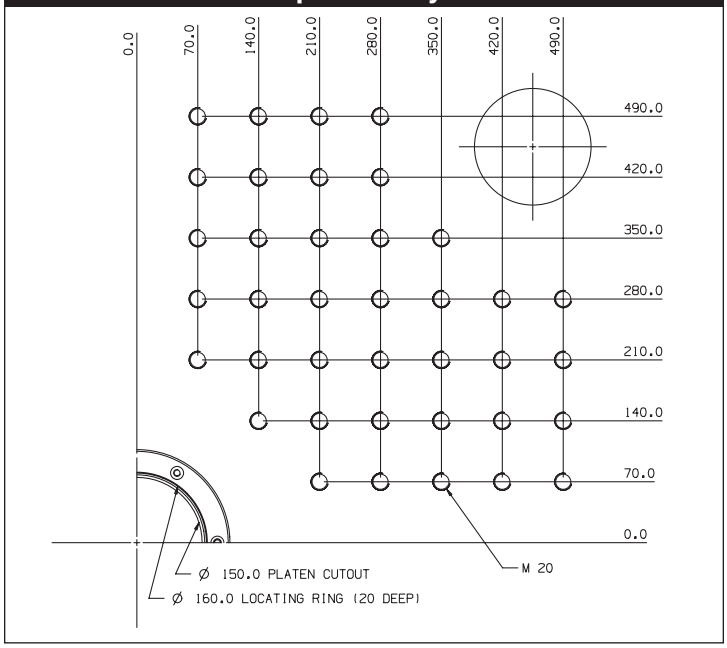

SPI Moving Platen

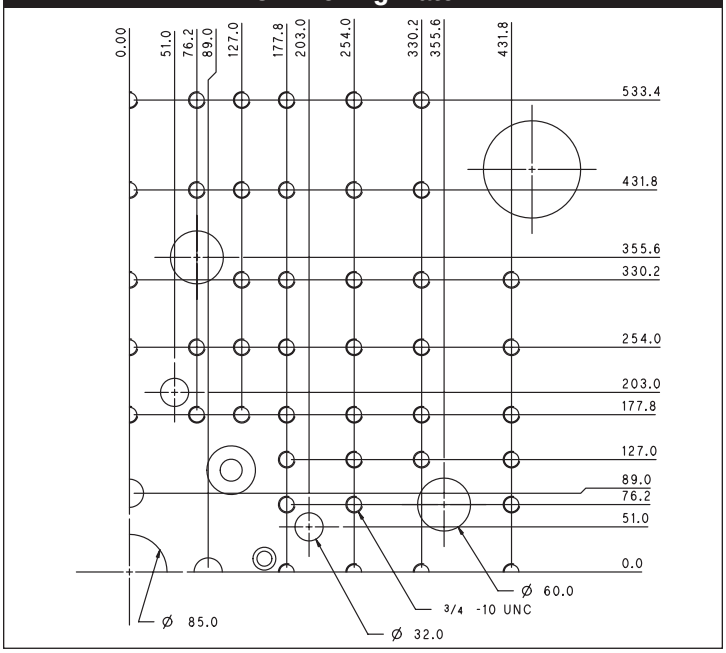

SPI Stationary Platen

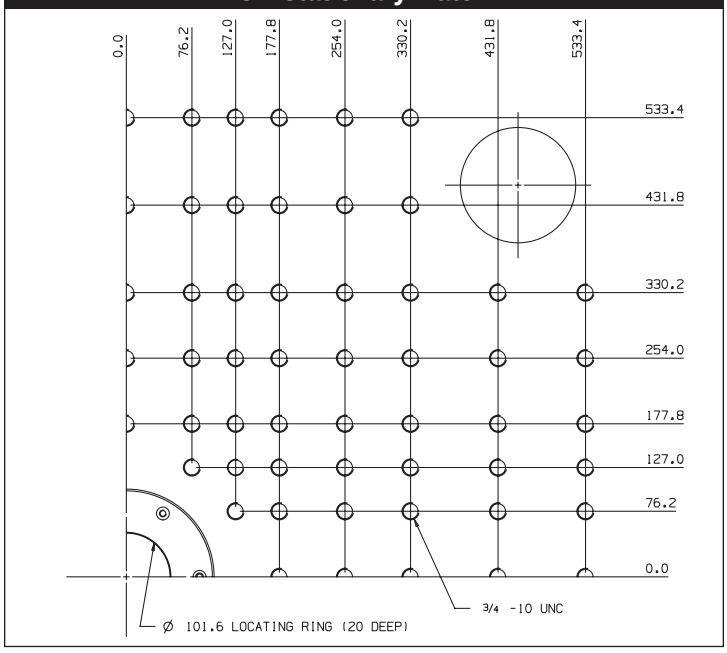

Notes: All dimensions are in [mm].

H400

Clamp		H400	HL400
Clamp Force	kN	4000	4000
Tiebar Spacing (H x V)	mm	920 x 920	920 x 920
Platen Size (H x V)	mm	1310 x 1310	1310 x 1310
Clamp Stroke(1)	mm	725 / 1280	1160 / 1755
Shutheight (Min-Max)(2)	mm	320 / 875	520 / 1115
Shutheight with Stack Carrier (Min / Max)(8)	mm	320 / 875	520 / 1115
Daylight	mm	1600	2275
Ejector Stroke	mm	200	200
Ejector Force	kN	96	96
Tiebar Diameter	mm	148	148
Dry Cycle(3)	s	2.7	3.1
E6 Cycle Time Contribution(4)	s	2.1	2.1

RS Injection Model		RS55			RS65			RS80			RS95			RS115		
Working Capacity			1021			1696			2733			4880			7900	
Screw Diameter	mm	45	50	55	55	60	65	65	70	80	80	85	95	95	100	115
Screw L/D(5)		25.0	25.0	22.6	25.0	25.0	22.9	27.1	25.0	21.7	26.7	25.0	22.2	26.4	25.0	21.5
Injection Pressure	bar	2570	2080	1720	2380	2000	1700	2350	2030	1550	2280	2020	1620	2240	2020	1530
Injection Stroke	mm	250	250	250	300	300	300	350	350	350	425	425	425	500	500	500
Injection Capacity	cm^3	398	491	594	713	848	995	1161	1347	1759	2136	2412	3012	3544	3927	5193
Barrel Heat Power	kW	17.6	21.6	21.6	27.2	27.2	27.2	42.0	42.0	42.0	57.6	57.6	57.6	81.2	81.2	95.2
Barrel Control Zones(6)		4	4	4	4	4	4	5	5	5	6	6	6	7	7	7
Accumulator Assist Injection Rate(7)	cm^3/s	765	945	1144	827	984	1154	1568	1819	2376	1615	1824	2278	1648	1827	2416
High Speed Accumulator Assist Injection Rate (7),(8)	cm^3/s	1329	1642	1987	1436	1709	2005	3801	4408	5753	3973	4485	5602	3901	4326	5719
Carriage Force	kN	80	80	80	80	80	80	120	120	120	120	120	120	120	120	120
Melt Channel Diameter	mm	14	14	14	14	14	14	22	22	22	22	22	22	22	22	22
Standard Screw Drive(9)																
Screw Speed	rpm	424	382	347	347	318	294	294	273	239	239	225	201	201	191	166
Screw Peripheral Speed	m/s	1.00	1.00	1.00	1.00	1.00	1.00	1.00	1.00	1.00	1.00	1.00	1.00	1.00	1.00	1.00
Screw Torque	Nm	509	677	876	876	1108	1375	1375	1660	2409	2409	2837	3831	3831	4250	6400
High Torque Screw Drive(8) (9)																
Screw Speed	rpm	276	248	226	226	207	191	191	177	155	155	146	131	131	124	108
Screw Peripheral Speed	m/s	0.65	0.65	0.65	0.65	0.65	0.65	0.65	0.65	0.65	0.65	0.65	0.65	0.65	0.65	0.65
Screw Torque	Nm	790	1050	1358	1358	1718	2132	2132	2605	3736	3736	4400	5941	5900	6800	9950
High Power Screw Drive(8) (9)																
Screw Speed	rpm	340	306	278	278	255	235	235	218	191	191	180	161	161	153	133
Screw Peripheral Speed	m/s	0.80	0.80	0.80	0.80	0.80	0.80	0.80	0.80	0.80	0.80	0.80	0.80	0.80	0.80	0.80
Screw Torque	Nm	790	1050	1358	1358	1718	2132	2132	2605	3736	3736	4400	5941	5900	6800	9950
High Speed Screw Drive(8) (9)																
Screw Speed	rpm	531	n.a.	434	469	430	397	397	368	322	322	303	271	271	258	n.a.
Screw Peripheral Speed	m/s	1.25	n.a.	1.25	1.35	1.35	1.35	1.35	1.35	1.35	1.35	1.35	1.35	1.35	1.35	n.a.
Screw Torque	Nm	509	n.a.	876	876	1108	1273	1273	1680	2158	2158	2837	3533	3533	4250	n.a.
Overall Machine Specifications																
Oil Volume	l		900			900			1200			1225			1475	
Overall Width x Height	mm	2203	x	2470	2203	x	2470	2258	x	2520	2258	x	2520	2271	x	2520
Overall Length H/HL	mm	8666	/	9816	9279	/	10429	9736	/	10886	10523	/	11673	12036	/	13186
Overall Weight H/HL	t	24	/	25	25	/	26	28	/	29	29	/	30	31	/	33

Notes:
(1) Available stroke at maximum shutheight / maximum stroke at minimum shutheight.
(2) Minimum shutheight is increased with optional stack mold carrier installed.
(3) 100% speed, 100% clamp force using available stroke at maximum shutheight.
(4) Dry cycle performance according to the Euromap 6 standard (www.euromap.org).
(5) Special screw L/D's are available.
(6) Additional zones provided for barrel head, nozzle adapter, and optional shut-off head.
(7) Instantaneous injection rate at 2/3 of maximum available plastic pressure up to 30% injection stroke.
(8) Requires optional equipment.
(9) Please consult Husky for the ideal drive, screw design and plasticizing performance for your application.

Specifications are subject to change without notice
n.a. = not available

Euromap Moving Platen

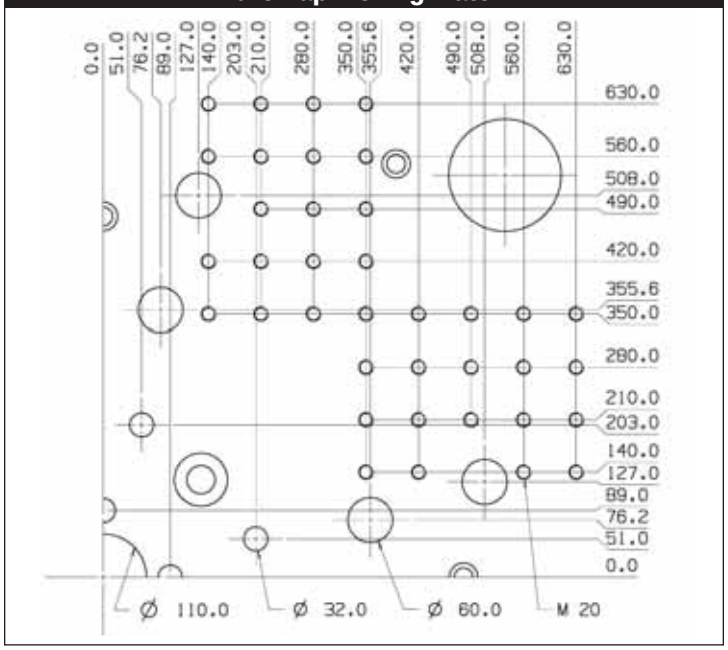

Euromap Stationary Platen

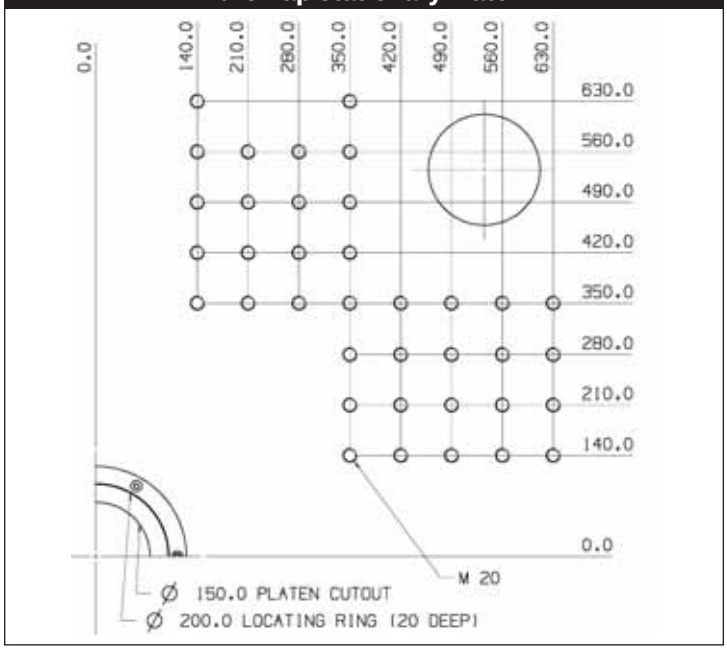

SPI Moving Platen

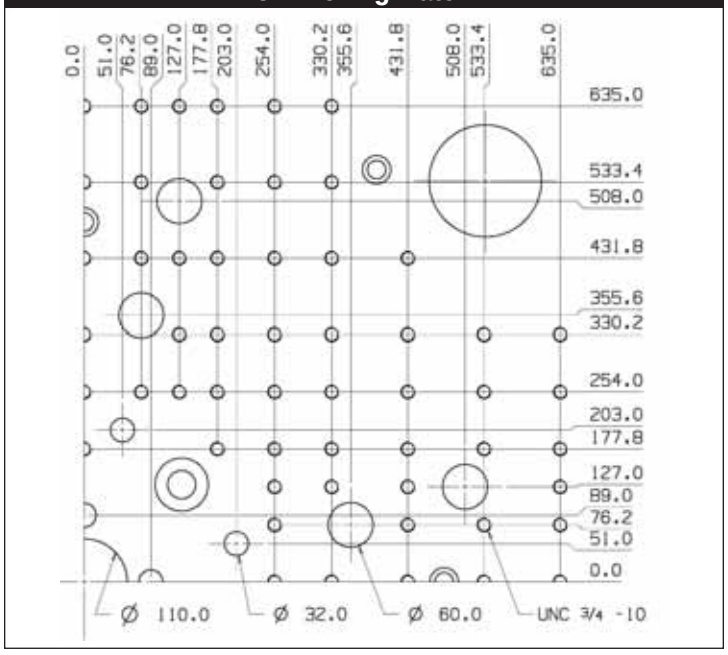

SPI Stationary Platen

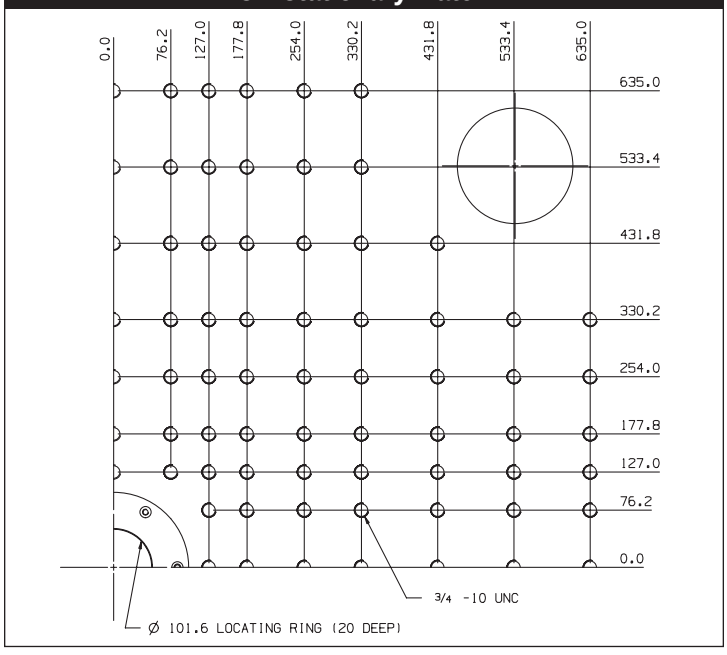

Notes: All dimensions are in [mm].

H500

Clamp		H500	HL500
Clamp Force	kN	5000	5000
Tiebar Spacing (H x V)	mm	1020 x 1020	1020 x 1020
Platen Size (H x V)	mm	1440 x 1480	1440 x 1480
Clamp Stroke(1)	mm	850 / 1450	1245 / 1925
Shutheight (Min-Max)(2)	mm	350 / 950	550 / 1230
Shutheight with Stack Carrier (Min / Max)(8)	mm	350 / 950	550 / 1230
Daylight	mm	1800	2475
Ejector Stroke	mm	200	200
Ejector Force	kN	96	96
Tiebar Diameter	mm	168	168
Dry Cycle(3)	s	2.8	3.2
E6 Cycle Time Contribution(4)	s	2.1	2.1

RS Injection Model		RS65			RS80			RS95			RS115		
Working Capacity			1696			2733			4880			7900	
Screw Diameter	mm	55	60	65	65	70	80	80	85	95	95	100	115
Screw L/D(5)		25.0	25.0	22.9	27.1	25.0	21.7	26.7	25.0	22.2	26.4	25.0	21.5
Injection Pressure	bar	2380	2000	1700	2350	2030	1550	2280	2020	1620	2240	2020	1530
Injection Stroke	mm	300	300	300	350	350	350	425	425	425	500	500	500
Injection Capacity	cm^3	713	848	995	1161	1347	1759	2136	2412	3012	3544	3927	5193
Barrel Heat Power	kW	27.2	27.2	27.2	42.0	42.0	42.0	57.6	57.6	57.6	81.2	81.2	95.2
Barrel Control Zones(6)		4	4	4	5	5	5	6	6	6	7	7	7
Accumulator Assist Injection Rate(7)	cm^3/s	827	984	1154	1568	1819	2376	1615	1824	2278	1648	1827	2416
High Speed Accumulator Assist Injection Rate (7),(8)	cm^3/s	1436	1709	2005	3801	4408	5753	3973	4485	5602	3901	4326	5719
Carriage Force	kN	80	80	80	120	120	120	120	120	120	120	120	120
Melt Channel Diameter	mm	14	14	14	22	22	22	22	22	22	22	22	22
Standard Screw Drive(9)													
Screw Speed	rpm	347	318	294	294	273	239	239	225	201	201	191	166
Screw Peripheral Speed	m/s	1.00	1.00	1.00	1.00	1.00	1.00	1.00	1.00	1.00	1.00	1.00	1.00
Screw Torque	Nm	876	1108	1375	1375	1660	2409	2409	2837	3831	3831	4250	6400
High Torque Screw Drive(8) (9)													
Screw Speed	rpm	226	207	191	191	177	155	155	146	131	131	124	108
Screw Peripheral Speed	m/s	0.65	0.65	0.65	0.65	0.65	0.65	0.65	0.65	0.65	0.65	0.65	0.65
Screw Torque	Nm	1358	1718	2132	2132	2605	3736	3736	4400	5941	5900	6800	9950
High Power Screw Drive(8) (9)													
Screw Speed	rpm	278	255	235	235	218	191	191	180	161	161	153	133
Screw Peripheral Speed	m/s	0.80	0.80	0.80	0.80	0.80	0.80	0.80	0.80	0.80	0.80	0.80	0.80
Screw Torque	Nm	1358	1718	2132	2132	2605	3736	3736	4400	5941	5900	6800	9950
High Speed Screw Drive(8) (9)													
Screw Speed	rpm	469	430	397	397	368	322	322	303	271	271	258	n.a.
Screw Peripheral Speed	m/s	1.35	1.35	1.35	1.35	1.35	1.35	1.35	1.35	1.35	1.35	1.35	n.a.
Screw Torque	Nm	876	1108	1273	1273	1680	2158	2158	2837	3533	3533	4250	n.a.
Overall Machine Specifications													
Oil Volume	l		900			1200			1225			1475	
Overall Width x Height	mm	2382	x	2470	2382	x	2520	2382	x	2520	2383	x	2520
Overall Length H/HL	mm	9720	/	10879	10177	/	11336	10964	/	12123	12477	/	13636
Overall Weight H/HL	t	27	/	29	30	/	32	32	/	33	34	/	36

Notes:
(1) Available stroke at maximum shutheight / maximum stroke at minimum shutheight.
(2) Minimum shutheight is increased with optional stack mold carrier installed.
(3) 100% speed, 100% clamp force using available stroke at maximum shutheight.
(4) Dry cycle performance according to the Euromap 6 standard (www.euromap.org).
(5) Special screw L/D's are available.
(6) Additional zones provided for barrel head, nozzle adapter, and optional shut-off head.
(7) Instantaneous injection rate at 2/3 of maximum available plastic pressure up to 30% injection stroke.
(8) Requires optional equipment.
(9) Please consult Husky for the ideal drive, screw design and plasticizing performance for your application.

Specifications are subject to change without notice
n.a. = not available

Euromap Moving Platen

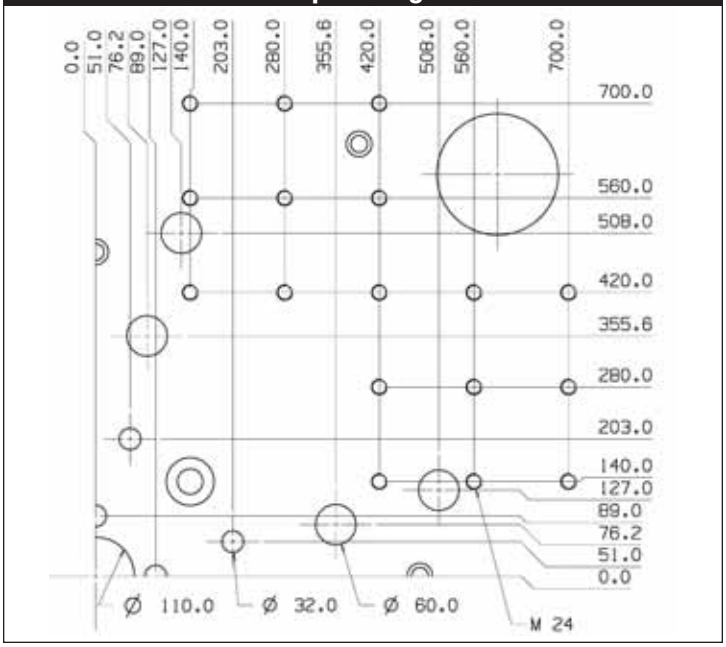

Euromap Stationary Platen

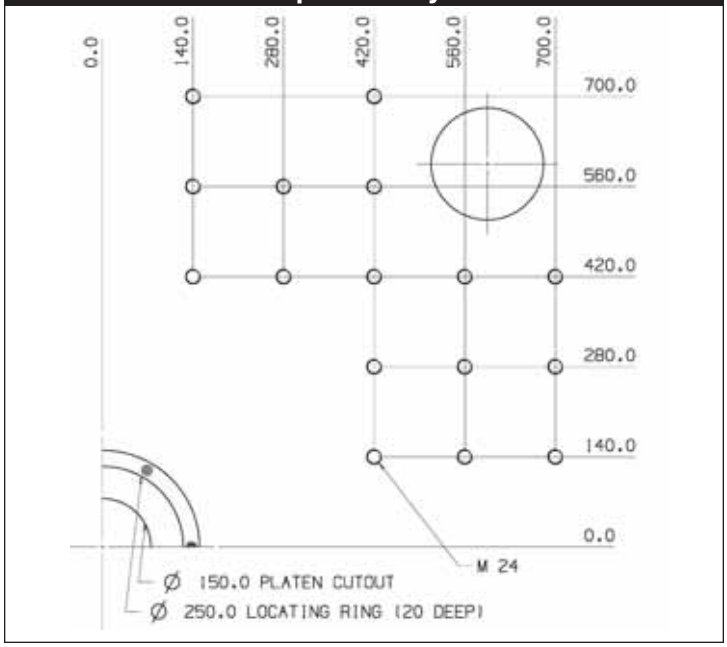

SPI Moving Platen

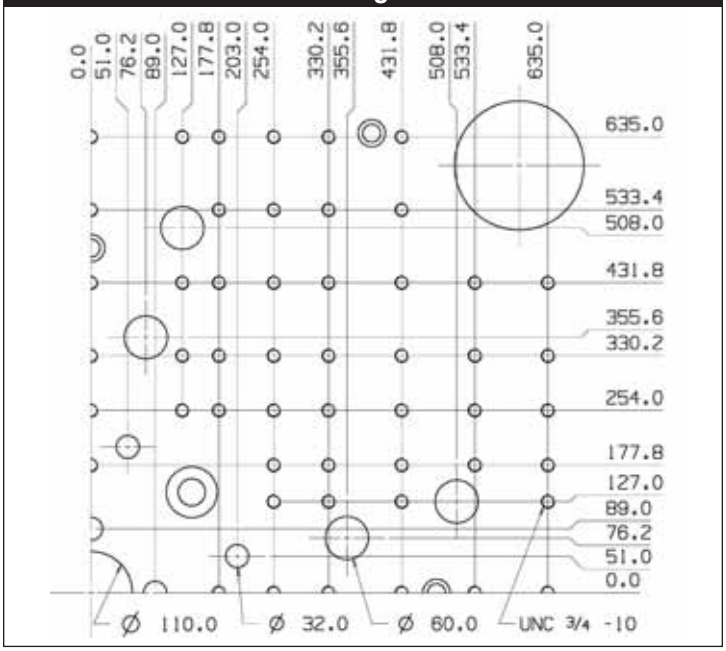

SPI Stationary Platen

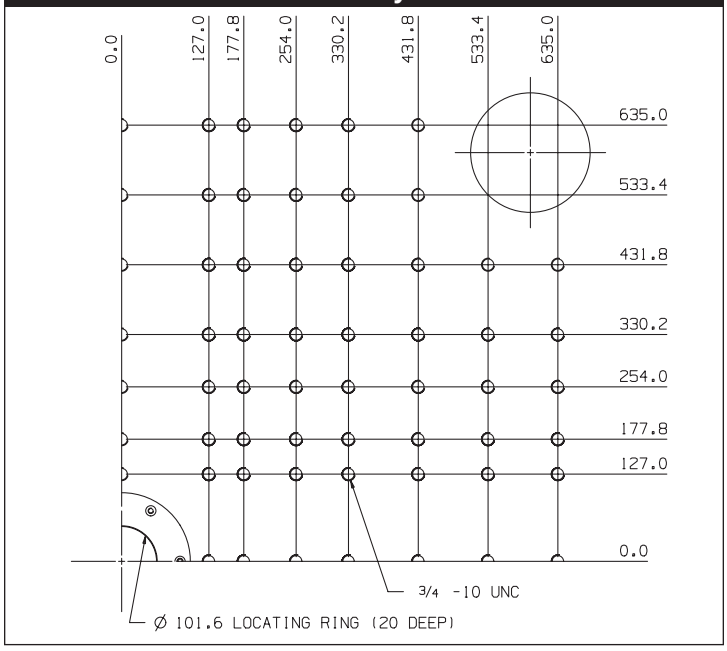

Notes: All dimensions are in [mm].

H650

Clamp		H650	HL650
Clamp Force	kN	6500	6500
Tiebar Spacing (H x V)	mm	1120 x 1120	1120 x 1120
Platen Size (H x V)	mm	1550 x 1550	1550 x 1550
Clamp Stroke(1)	mm	1000 / 1700	1325 / 2125
Shutheight (Min-Max)(2)	mm	400 / 1100	600 / 1400
Shutheight with Stack Carrier (Min / Max)(8)	mm	800 / 1100	800 / 1400
Daylight	mm	2100	2725
Ejector Stroke	mm	250	250
Ejector Force	kN	141	141
Tiebar Diameter	mm	195	195
Dry Cycle(3)	s	3.3	3.6
E6 Cycle Time Contribution(4)	s	2.3	2.3

RS Injection Model		RS80			RS95			RS115			RS135		
Standard Configuration(11)		Simultaneous, E-Drive			Simultaneous, E-Drive			Sequential, H-Drive			Sequential, H-Drive		
Working Capacity		2733			4880			7900			13800		
Screw Diameter	mm	65	70	80	80	85	95	95	100	115	115	125	135
Screw L/D (5)		27.1	25.0	21.7	26.7	25.0	22.2	26.4	25.0	21.5	25.0	22.9	21.1
Injection Pressure	bar	2350	2030	1550	2280	2020	1620	2240	2020	1530	2210	1870	1600
Injection Stroke	mm	350	350	350	425	425	425	500	500	500	600	600	600
Injection Capacity	cm^3	1161	1347	1759	2136	2412	3012	3544	3927	5193	6232	7363	8588
Barrel Heat Power	kW	42.0	42.0	42.0	57.6	57.6	57.6	81.2	81.2	95.2	101	101	101
Barrel Control Zones(6)		5	5	5	6	6	6	7	7	7	6	6	6
Standard Pump Based Injection Rate(10)	cm^3/s	435	500	675	450	510	645	515	570	754	710	840	990
High Speed Pump Based Injection Rate(8), (10)	cm^3/s	n.a.	n.a.	n.a.	n.a.	n.a.	n.a.	n.a.	n.a.	n.a.	1000	1200	1400
Accumulator Assist Injection Rate (7), (8)	cm^3/s	n.a.	n.a.	n.a.	n.a.	n.a.	n.a.	1648	1827	2416	1653	1952	2278
High Speed Accumulator Assist Injection Rate (7), (8)	cm^3/s	3801	4408	5753	3973	4485	5602	3901	4326	5719	4446	5251	6126
Carriage Force	kN	120	120	120	120	120	120	120	120	120	178	178	178
Melt Channel Diameter	mm	22	22	22	22	22	22	22	22	22	22	22	22
Standard Screw Drive(9)													
Screw Speed	rpm	294	273	239	239	225	201	201	191	166	166	150	131
Peripheral Screw Speed	m/s	1.00	1.00	1.00	1.00	1.00	1.00	1.00	1.00	1.00	1.00	0.98	0.93
Screw Torque	Nm	1375	1660	2409	2409	2837	3831	3831	4250	6400	6400	8000	9200
High Torque Screw Drive(8)(9)													
Screw Speed	rpm	191	177	155	155	146	131	131	124	108	108	99	92
Peripheral Screw Speed	m/s	0.65	0.65	0.65	0.65	0.65	0.65	0.65	0.65	0.65	0.65	0.65	0.65
Screw Torque	Nm	2132	2605	3736	3736	4400	5941	5900	6800	9950	9950	11900	11900
High Power Screw Drive (8)(9)													
Screw Speed	rpm	235	218	191	191	180	161	161	153	133	133	122	n.a.
Peripheral Screw Speed	m/s	0.80	0.80	0.80	0.80	0.80	0.80	0.80	0.80	0.80	0.80	0.80	n.a.
Screw Torque	Nm	2132	2605	3736	3736	4400	5941	5900	6800	9950	9950	11900	n.a.
High Speed Screw Drive(8)(9)													
Screw Speed	rpm	397	368	322	322	303	271	271	258	n.a.	n.a.	n.a.	n.a.
Peripheral Screw Speed	m/s	1.35	1.35	1.35	1.35	1.35	1.35	1.35	1.35	n.a.	n.a.	n.a.	n.a.
Screw Torque	Nm	1273	1680	2158	2158	2837	3533	3533	4250	n.a.	n.a.	n.a.	n.a.
Overall Machine Specifications													
Oil Volume	l		1200			1225			1700			2000	
Overall Width x Height	mm	2790	x	2580	2790	x	2580	2790	x	2580	3375	x	2830
Overall Length H/HL	mm	11112	/	12152	11899	/	12939	13412	/	14452	14577	/	15617
Overall Weight H/HL	t	32	/	34	34	/	36	38	/	40	43	/	45

Notes:
(1) Available stroke at maximum shutheight / maximum stroke at minimum shutheight.
(2) Minimum shutheight is increased with optional stack mold carrier installed.
(3) 100% speed, 100% clamp force using available stroke at maximum shutheight.
(4) Dry cycle performance according to the Euromap 6 standard (www.euromap.org).
(5) Special screw L/D's are available.
(6) Additional zones provided for barrel head, nozzle adapter, and optional shut-off head.
(7) Instantaneous injection rate at 2/3 of maximum available plastic pressure up to 30% injection stroke.
(8) Requires optional equipment.
(9) Please consult Husky for the ideal drive, screw design and plasticizing performance for your application.
(10) Maximum pump based injection rate at 80% maximum pressure.
(11) E-Drive=electric servo screw drive. H-Drive=hydraulic screw drive. Optional upgrade from H-Drive sequential to E-Drive simultaneous available on most models.

Specifications are subject to change without notice
n.a. = not available

Euromap Moving Platen

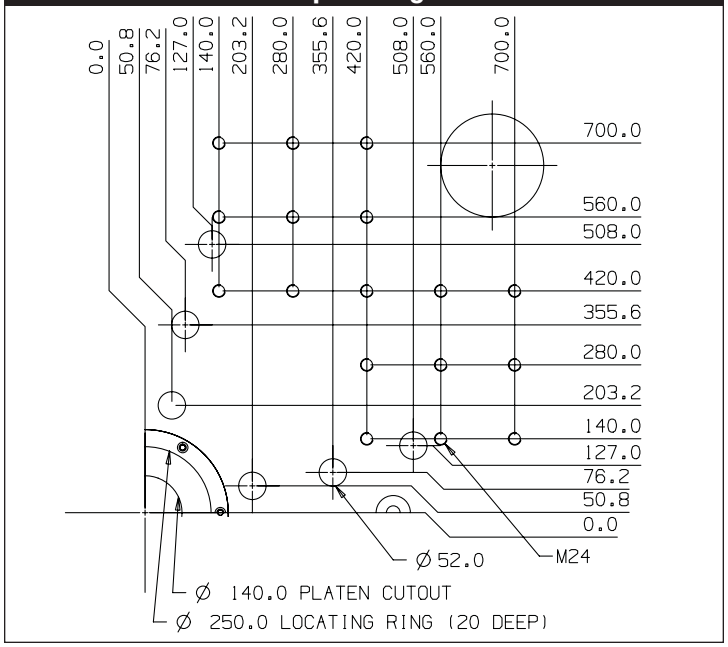

Euromap Stationary Platen

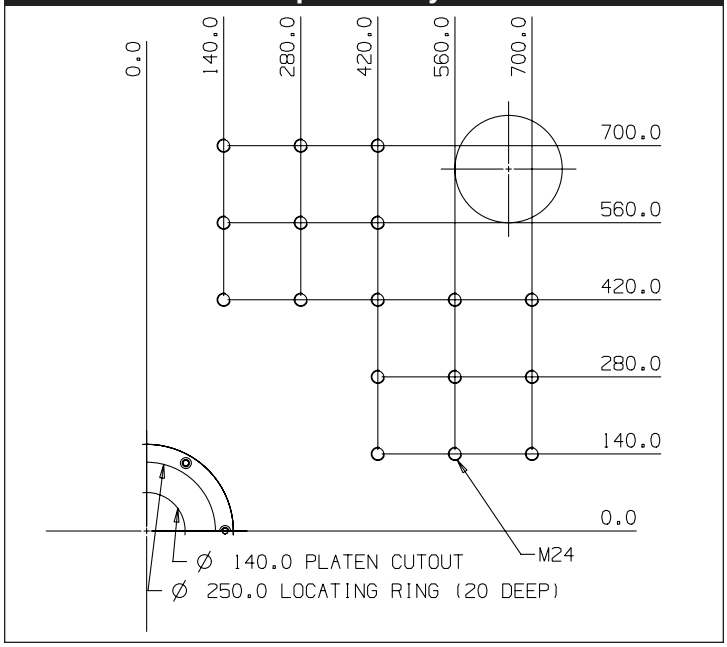

SPI Moving Platen

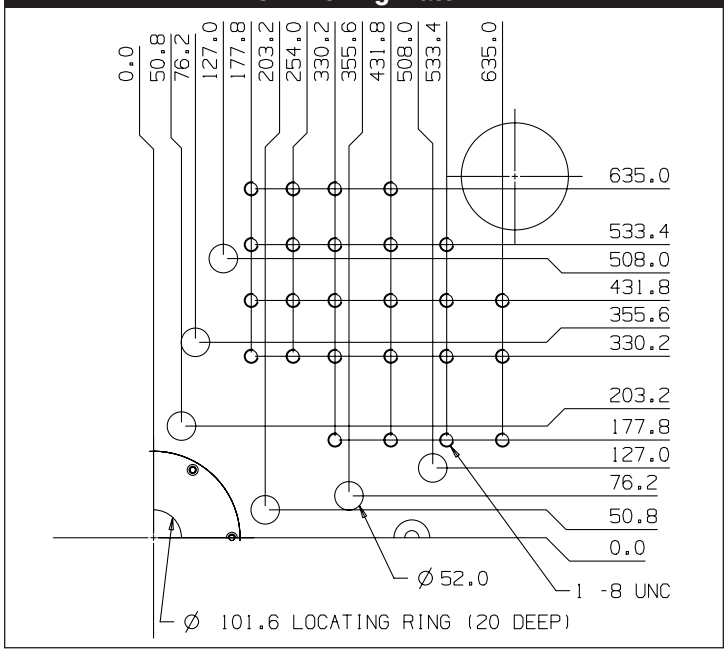

SPI Stationary Platen

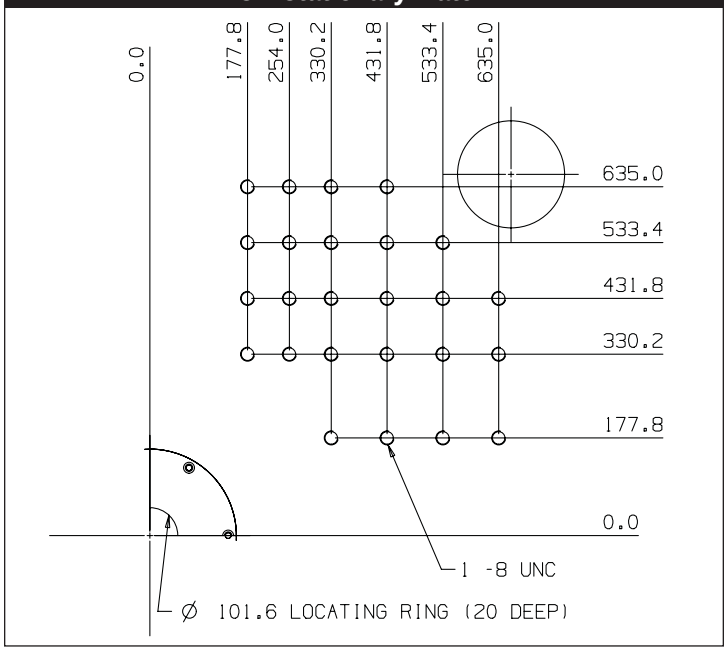

Notes: All dimensions are in [mm].

H800

Clamp		H800	HL800
Clamp Force	kN	8000	8000
Tiebar Spacing (H x V)	mm	1320 x 1220	1320 x 1220
Platen Size (H x V)	mm	1750 x 1700	1750 x 1700
Clamp Stroke(1)	mm	1150 / 1850	1450 / 2250
Shutheight (Min-Max)(2)	mm	500 / 1200	700 / 1500
Shutheight with Stack Carrier (Min / Max)(8)	mm	850 / 1200	1000 / 1500
Daylight	mm	2350	2950
Ejector Stroke	mm	250	250
Ejector Force	kN	187	187
Tiebar Diameter	mm	215	215
Dry Cycle(3)	s	3.8	4.1
E6 Cycle Time Contribution(4)	s	2.8	2.8

RS Injection Model		RS80			RS95			RS115			RS135			RS155		
Standard Configuration(11)		Simultaneous, E-Drive			Simultaneous, E-Drive			Sequential, H-Drive			Sequential, H-Drive			Sequential, H-Drive		
Working Capacity		2733			4880			7900			13800			19900		
Screw Diameter	mm	65	70	80	80	85	95	95	100	115	115	125	135	135	145	155
Screw L/D (5)		27.1	25.0	21.7	26.7	25.0	22.2	26.4	25.0	21.5	25.0	22.9	21.1	25.0	23.2	21.6
Injection Pressure	bar	2350	2030	1550	2280	2020	1620	2240	2020	1530	2210	1870	1600	2110	1830	1600
Injection Stroke	mm	350	350	350	425	425	425	500	500	500	600	600	600	660	660	660
Injection Capacity	cm^3	1161	1347	1759	2136	2412	3012	3544	3927	5193	6232	7363	8588	9447	10899	12454
Barrel Heat Power	kW	42.0	42.0	42.0	57.6	57.6	57.6	81.2	81.2	95.2	101	101	101	122	122	122
Barrel Control Zones(6)		5	5	5	6	6	6	7	7	7	6	6	6	6	6	6
Standard Pump Based Injection Rate(10)	cm^3/s	435	500	675	450	510	645	515	570	754	710	840	990	950	1100	1260
High Speed Pump Based Injection Rate(8), (10)	cm^3/s	n.a.	n.a.	n.a.	n.a.	n.a.	n.a.	n.a.	n.a.	n.a.	1000	1200	1400	1300	1500	1700
Accumulator Assist Injection Rate (7), (8)	cm^3/s	n.a.	n.a.	n.a.	n.a.	n.a.	n.a.	1648	1827	2416	1653	1952	2278	1728	1994	2278
High Speed Accumulator Assist Injection Rate(7), (8)	cm^3/s	3801	4408	5753	3973	4485	5602	3901	4326	5719	4446	5251	6126	4649	5363	6126
Carriage Force	kN	120	120	120	120	120	120	120	120	120	178	178	178	178	178	178
Melt Channel Diameter	mm	22	22	22	22	22	22	22	22	22	22	22	22	22	22	22
Standard Screw Drive(8)																
Screw Speed	rpm	294	273	239	239	225	201	201	191	166	166	150	131	113	105	99
Peripheral Screw Speed	m/s	1.00	1.00	1.00	1.00	1.00	1.00	1.00	1.00	1.00	1.00	0.98	0.93	0.80	0.80	0.80
Screw Torque	Nm	1375	1660	2409	2409	2837	3831	3831	4250	6400	6400	8000	9200	9200	9600	11500
High Torque Screw Drive(8)(9)																
Screw Speed	rpm	191	177	155	155	146	131	131	124	108	108	99	92	85	79	74
Peripheral Screw Speed	m/s	0.65	0.65	0.65	0.65	0.65	0.65	0.65	0.65	0.65	0.65	0.65	0.65	0.60	0.60	0.60
Screw Torque	Nm	2132	2605	3736	3736	4400	5941	5900	6800	9950	9950	11900	11900	15000	17000	17000
High Power Screw Drive(8)(9)																
Screw Speed	rpm	235	218	191	191	180	161	161	153	133	133	122	n.a.	113	105	n.a.
Peripheral Screw Speed	m/s	0.80	0.80	0.80	0.80	0.80	0.80	0.80	0.80	0.80	0.80	0.80	n.a.	0.80	0.80	n.a.
Screw Torque	Nm	2132	2605	3736	3736	4400	5941	5900	6800	9950	9950	11900	n.a.	15000	17000	n.a.
High Speed Screw Drive(8)(9)																
Screw Speed	rpm	397	368	322	322	303	271	271	258	n.a.	n.a.	n.a.	n.a.	141	n.a.	n.a.
Peripheral Screw Speed	m/s	1.35	1.35	1.35	1.35	1.35	1.35	1.35	1.35	n.a.	n.a.	n.a.	n.a.	1.00	n.a.	n.a.
Screw Torque	Nm	1273	1680	2158	2158	2837	3533	3533	4250	n.a.	n.a.	n.a.	n.a.	9200	n.a.	n.a.
Overall Machine Specifications																
Oil Volume	l	1200			1225			1700			2000			2600		
Overall Width x Height	mm	3030	x	2580	3030	x	2580	3030	x	2580	3495	x	2830	3495	x	2830
Overall Length H/HL	mm	11552	/	12587	12339	/	13374	13852	/	14887	15017	/	16052	16002	/	17037
Overall Weight H/HL	t	43	/	45	45	/	47	49	/	51	54	/	56	57	/	59

Notes:
(1) Available stroke at maximum shutheight / maximum stroke at minimum shutheight.
(2) Minimum shutheight is increased with optional stack mold carrier installed.
(3) 100% speed, 100% clamp force using available stroke at maximum shutheight.
(4) Dry cycle performance according to the Euromap 6 standard (www.euromap.org).
(5) Special screw L/D's are available.
(6) Additional zones provided for barrel head, nozzle adapter, and optional shut-off head.
(7) Instantaneous injection rate at 2/3 of maximum available plastic pressure up to 30% injection stroke.
(8) Requires optional equipment.
(9) Please consult Husky for the ideal drive, screw design and plasticizing performance for your application.
(10) Maximum pump based injection rate at 80% maximum pressure.
(11) E-Drive=electric servo screw drive. H-Drive=hydraulic screw drive. Optional upgrade from H-Drive sequential to E-Drive simultaneous available on most models.

Specifications are subject to change without notice
n.a. = not available

Euromap Moving Platen

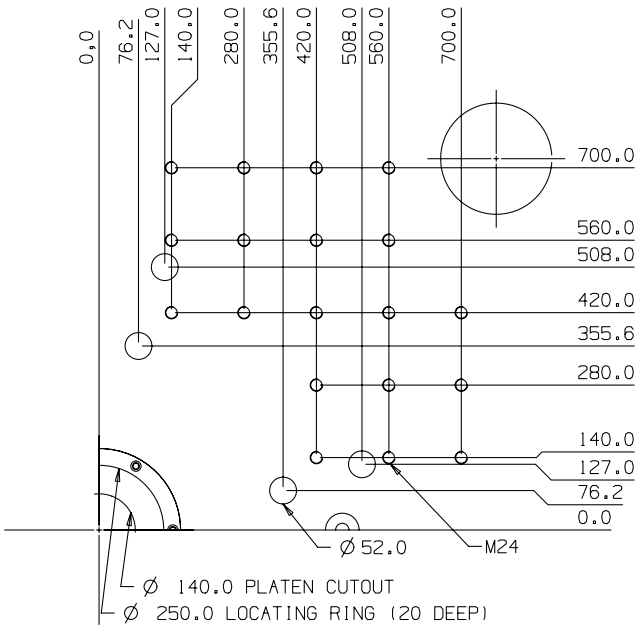

Euromap Stationary Platen

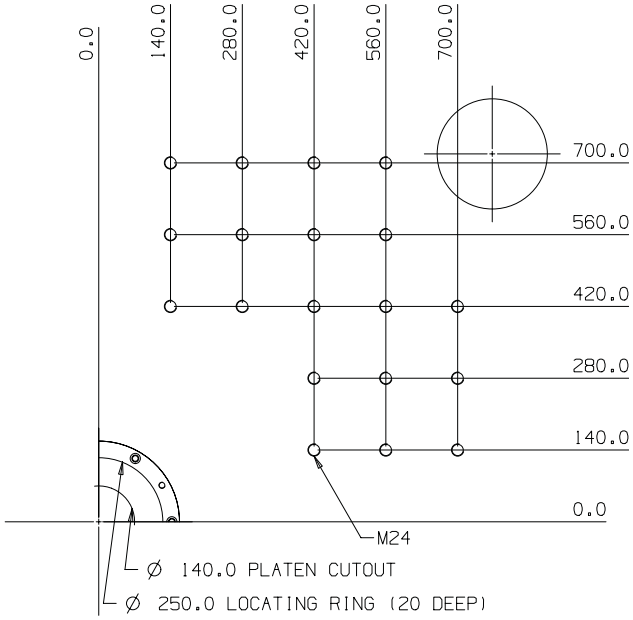

SPI Moving Platen

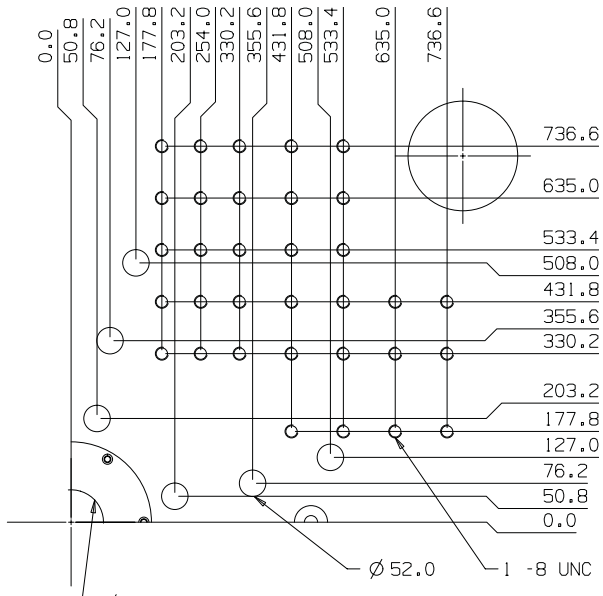

SPI Stationary Platen

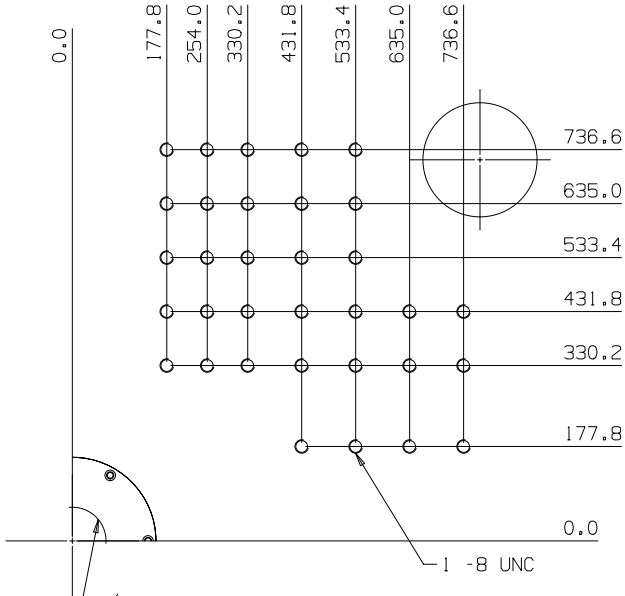

Notes: All dimensions are in [mm].

H1000

Clamp		H1000	HL1000
Clamp Force	kN	10000	10000
Tiebar Spacing (H x V)	mm	1550 x 1320	1550 x 1320
Platen Size (H x V)	mm	2070 x 1840	2070 x 1840
Clamp Stroke(1)	mm	1300 / 2000	1600 / 2400
Shutheight (Min-Max)(2)	mm	600 / 1300	800 / 1600
Shutheight with Stack Carrier (Min / Max)(8)	mm	900 / 1300	1200 / 1600
Daylight	mm	2600	3200
Ejector Stroke	mm	250	250
Ejector Force	kN	187	187
Tiebar Diameter	mm	240	240
Dry Cycle(3)	s	4.2	4.5
E6 Cycle Time Contribution(4)	s	3.0	3.0

RS Injection Model		RS95			RS115			RS135			RS155		
Standard Configuration(11)		Simultaneous, E-Drive			Sequential, H-Drive			Sequential, H-Drive			Sequential, H-Drive		
Working Capacity		4880			7900			13800			19900		
Screw Diameter	mm	80	85	95	95	100	115	115	125	135	135	145	155
Screw L/D (5)		26.7	25.0	22.2	26.4	25.0	21.5	25.0	22.9	21.1	25.0	23.2	21.6
Injection Pressure	bar	2280	2020	1620	2240	2020	1530	2210	1870	1600	2110	1830	1600
Injection Stroke	mm	425	425	425	500	500	500	600	600	600	660	660	660
Injection Capacity	cm^3	2136	2412	3012	3544	3927	5193	6232	7363	8588	9447	10899	12454
Barrel Heat Power	kW	57.6	57.6	57.6	81.2	81.2	95.2	101	101	101	122	122	122
Barrel Control Zones(6)		6	6	6	7	7	7	6	6	6	6	6	6
Standard Pump Based Injection Rate(10)	cm^3/s	450	510	645	515	570	754	710	840	990	950	1100	1260
High Speed Pump Based Injection Rate(8), (10)	cm^3/s	n.a.	n.a.	n.a.	n.a.	n.a.	n.a.	1000	1200	1400	1300	1500	1700
Accumulator Assist Injection Rate (7), (8)	cm^3/s	n.a.	n.a.	n.a.	1648	1827	2416	1653	1952	2278	1728	1994	2278
High Speed Accumulator Assist Injection Rate (7), (8)	cm^3/s	3973	4485	5602	3901	4326	5719	4446	5251	6126	4649	5363	6126
Carriage Force	kN	120	120	120	120	120	120	178	178	178	178	178	178
Melt Channel Diameter	mm	22	22	22	22	22	22	22	22	22	22	22	22
Standard Screw Drive(9)													
Screw Speed	rpm	239	225	201	201	191	166	166	150	131	113	105	99
Peripheral Screw Speed	m/s	1.00	1.00	1.00	1.00	1.00	1.00	1.00	0.98	0.93	0.80	0.80	0.80
Screw Torque	Nm	2409	2837	3831	3831	4250	6400	6400	8000	9200	9200	9600	11500
High Torque Screw Drive(8)(9)													
Screw Speed	rpm	155	146	131	131	124	108	108	99	92	85	79	74
Peripheral Screw Speed	m/s	0.65	0.65	0.65	0.65	0.65	0.65	0.65	0.65	0.65	0.60	0.60	0.60
Screw Torque	Nm	3736	4400	5941	5900	6800	9950	9950	11900	11900	15000	17000	17000
High Power Screw Drive(8)(9)													
Screw Speed	rpm	191	180	161	161	153	133	133	122	n.a.	113	105	n.a.
Peripheral Screw Speed	m/s	0.80	0.80	0.80	0.80	0.80	0.80	0.80	0.80	n.a.	0.80	0.80	n.a.
Screw Torque	Nm	3736	4400	5941	5900	6800	9950	9950	11900	n.a.	15000	17000	n.a.
High Speed Screw Drive(8)(9)													
Screw Speed	rpm	322	303	271	271	258	n.a.	n.a.	n.a.	n.a.	141	n.a.	n.a.
Peripheral Screw Speed	m/s	1.35	1.35	1.35	1.35	1.35	n.a.	n.a.	n.a.	n.a.	1.00	n.a.	n.a.
Screw Torque	Nm	2158	2837	3533	3533	4250	n.a.	n.a.	n.a.	n.a.	9200	n.a.	n.a.
Overall Machine Specifications													
Oil Volume	l	1225			1700			2000			2600		
Overall Width x Height	mm	3350	x	2580	3350	x	2580	3655	x	2830	3655	x	2830
Overall Length H/HL	mm	12869	/	13889	14382	/	15402	15547	/	16567	16532	/	17552
Overall Weight H/HL	t	54	/	56	58	/	60	63	/	65	66	/	68

Notes:
(1) Available stroke at maximum shutheight / maximum stroke at minimum shutheight.
(2) Minimum shutheight is increased with optional stack mold carrier installed.
(3) 100% speed, 100% clamp force using available stroke at maximum shutheight.
(4) Dry cycle performance according to the Euromap 6 standard (www.euromap.org).
(5) Special screw L/D's are available.
(6) Additional zones provided for barrel head, nozzle adapter, and optional shut-off head.
(7) Instantaneous injection rate at 2/3 of maximum available plastic pressure up to 30% injection stroke.
(8) Requires optional equipment.
(9) Please consult Husky for the ideal drive, screw design and plasticizing performance for your application.
(10) Maximum pump based injection rate at 80% maximum pressure.
(11) E-Drive=electric servo screw drive. H-Drive=hydraulic screw drive. Optional upgrade from H-Drive sequential to E-Drive simultaneous available on most models.

Specifications are subject to change without notice
n.a. = not available

Euromap Moving Platen

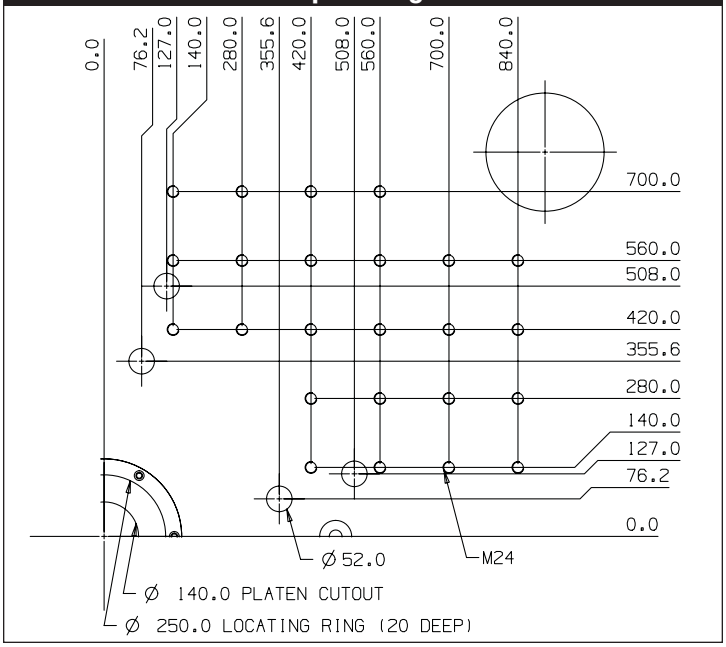

Euromap Stationary Platen

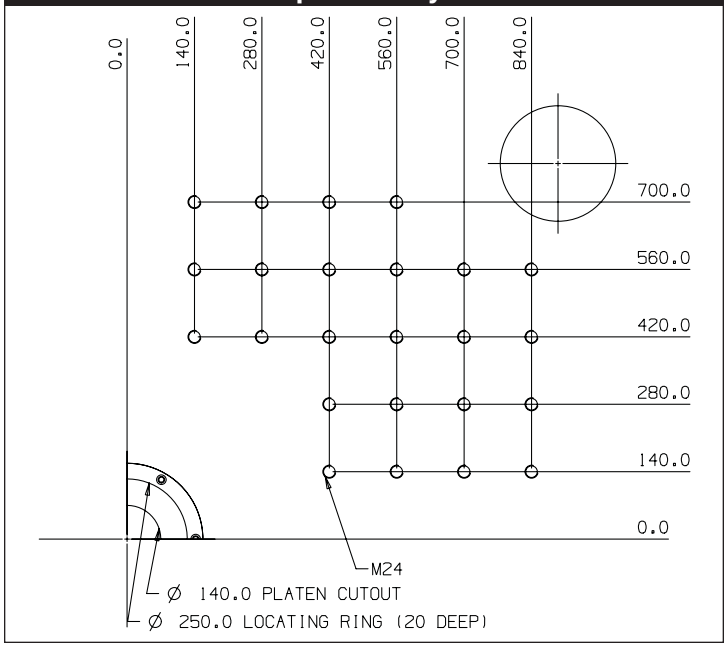

SPI Moving Platen

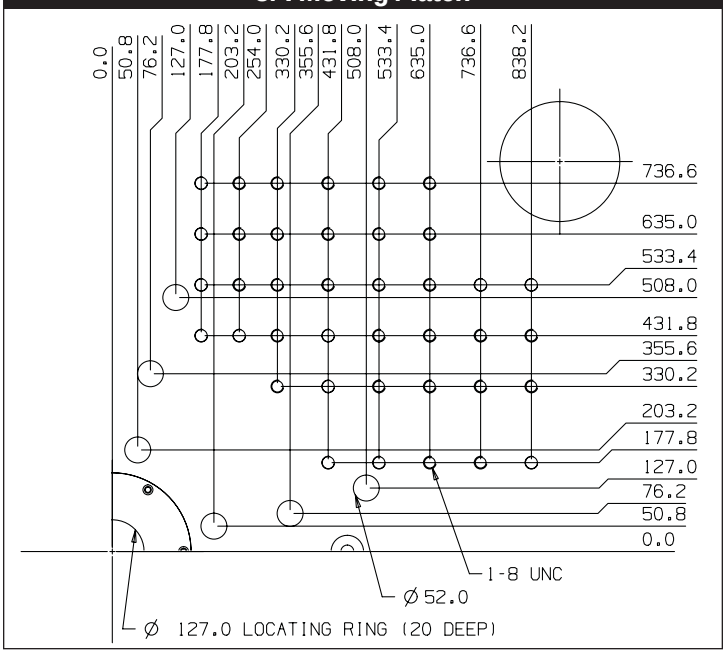

SPI Stationary Platen

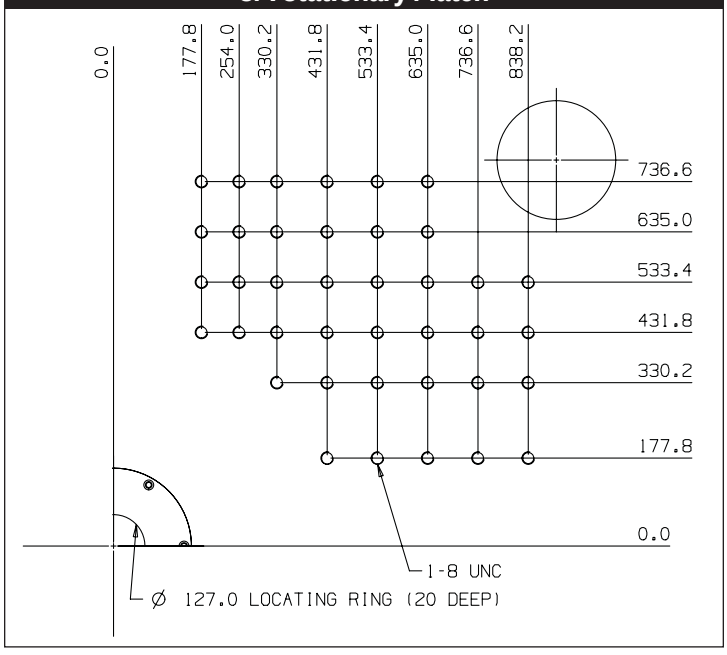

Notes: All dimensions are in [mm].

Dimensions H90-H1000

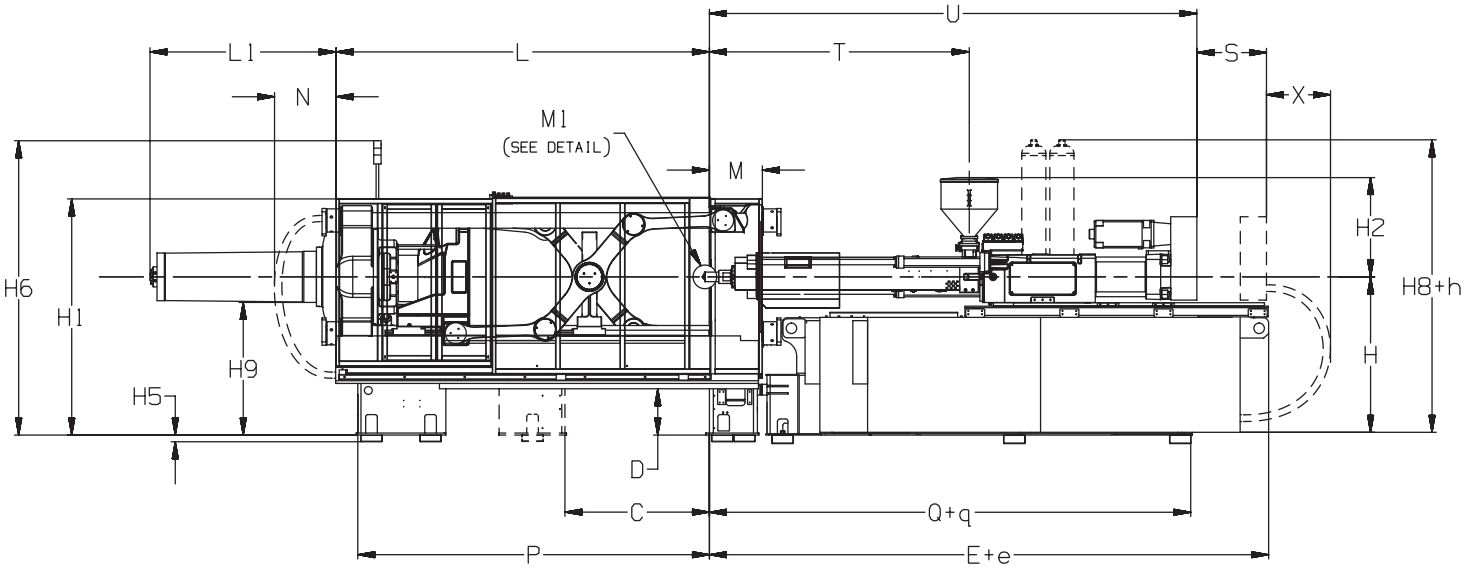

Clamp	H*	H1*	H5 +/-17	H6*	H8*†	H9	C	D*	L	L1	M	N	P
H90/120	1350	2072	81	2551	968+ h	1200	975	733	1910	603	295	0	1425
HL120	1350	2072	81	2551	968+ h	1200	1375	733	2310	853	295	0	1825
H160	1350	2059	81	2547	968+ h	1185	975	698	1990	677	305	0	1450
HL160	1350	2059	81	2547	968+ h	1185	1375	698	2390	929	305	0	1850
H225	1500	2063	81	2645	968+ h	1320	1215	749	2271	837	360	0	2040
HL225	1500	2063	81	2645	968+ h	1320	1665	749	2721	1110	360	0	2490
H300	1500	2196	81	2617	968+ h	1290	1390	666	2509	981	425	0	2360
HL300	1500	2196	81	2617	968+ h	1292	1915	666	3030	1324	425	0	2885
H400	1500	2304	81	2791	968+ h	1258	1195	439	2865	1289	510	0	2859
HL400	1500	2304	81	2791	2389	1258	1870	439	3540	1764	510	0	3534
H500	1500	2368	81	2854	2389	1261	1445	343	3161	1434	530	0	3109
HL500	1500	2368	81	2854	2389	1245	2120	343	3836	1918	530	0	3784
H650	1500	2340	60	2440	2500	1285	1270	455	3750	1780	610	800	3780
HL650	1500	2340	60	2440	2500	1285	1470	455	4375	2195	610	800	4380
H800	1500	2380	60	2480	2500	1275	1370	495	4110	1860	710	800	4160
HL800	1500	2380	60	2480	2500	1275	1570	495	4710	2295	710	800	4760
H1000	1500	2420	65	2520	2500	1255	1400	395	4540	1960	810	800	4570
HL1000	1500	2420	65	2520	2500	1255	1600	395	5140	2380	810	800	5170

Clamp	Injection	h
H90/120	RS22, RS28	0
HL120	RS22, RS28	308
H90,H/HL120, H160	RS35 to RS45	822
H90,H/HL120, H160	RS55	1422
HL160	RS35, RS40	822
HL160, H225	RS45	1422
HL160, H/HL300	RS55	822
H225	RS55, RS65	822
H225, H/HL300, H400	RS80	842
HL225	RS45, RS55	822
HL225	RS65, RS80	1422
H300	RS45	308
H/HL300	RS65, RS95	1422
HL300	RS45	822
H400	RS65,RS95, RS115	1422
H400	RS55	1422
HL400 to HL1000	All	0

Injection	E	H2	Q	T sp	T hp	U sp	U hp	X
RS22	3098	892	2665	840	785	1904	1849	300
RS28	3098	892	2665	975	890	2064	1979	300
RS35	3098	892	2665	1163	1053	2366	2256	300
RS40	3098	892	2665	1250	1170	2568	2488	300
RS45	3098 +e	892	2665 +q	1490	1385	2923	2818	300
RS55	3098 +e	882	2665 +q	1710	1575	3512	3377	300
RS65	3098 +e	882	3562	1995	1865	3900	3770	300
RS80	5298	941	4465	2464	2464	4622	4622	300
RS95	5298	941	4465	2879	2879	5409	5409	300
RS115	6205	936	5312	3420	3420	6395	6395	300
RS135	7100	1250	6570	3702	3702	7560	7560	300
RS155	7850	1250	7320	4410	4410	8545	8545	300

Clamp	Injection	e	q
H90, H(L)120	All	0	0
H(L)160	RS35, RS40	0	0
H(L)160	RS45, RS55	290	0
H(L)225, H(L)300	RS45	665	897
H(L)225, H(L)400	RS55	795	897
H(L)225 to H(L)500	RS65	680	0
H(L)225 to H(L)1000	RS 80 to RS155	0	0

Notes:
*Add vibration mount height (H5) for height above ground.
*Height may be increased using optional machine risers.
†Add 200mm for machines sold in Italy.
sp = Standard and mid pressure injection models.
hp = High pressure injection models.

All dimensions are in [mm].

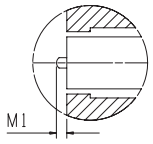

Carriage Stroke and Nozzle Protrusion Dimensions			Forward Protrusion	Purge Position	Back Position	Carriage Stroke
Clamp	Injection	Nozzle	M1	see note	see note	S
All	RS22	All	40	250	385	425
All	RS28	All	40	250	385	425
All	RS35	All	40	250	410	450
All	RS40	All	40	250	410	450
All	RS45	All	40	250	410	450
All	RS55	All	40	350	660	700
All	RS65	All	40	350	885	925
All	RS80	All	40	350	620	660
All	RS95	All	40	350	620	660
H(L)400, H(L)500	RS115	All	40	350	1060	1100
H(L)650	RS115 to RS155	Shut-off	40	777	777	817
H(L)650	RS115 to RS155	Open nozzle	40	1017	1017	1057
H(L)800	RS115 to RS155	Shut-off	40	827	827	867
H(L)800	RS115 to RS155	Open nozzle	40	1067	1067	1107
H(L)1000	RS115 to RS155	Shut-off	40	907	907	947
H(L)1000	RS115 to RS155	Open nozzle	40	1147	1147	1187

Note: Purge position and back position measured relative to the stationary platen mold mounting face.

Robot Mounting Patterns

H90 to HL500

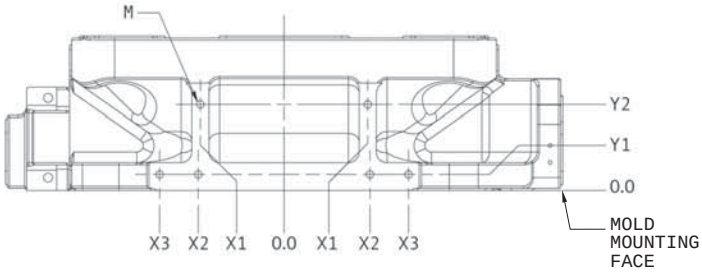

	X1	X2	X3	Y1	Y2	M
H90 to HL120	112.5	112.5	200	35	125	M16, 32 DEEP
H(L)160	142.5	142.5	230	35	165	M16, 32 DEEP
H225 to HL500	195	200	290	37.5	200	M20, 40 DEEP

H650 to HL1000

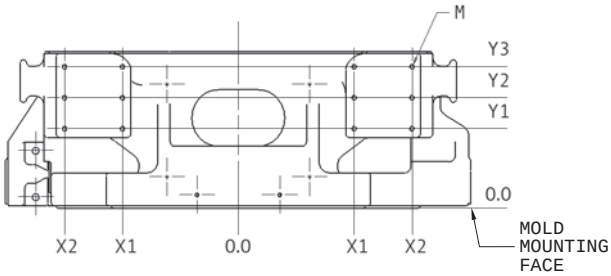

	X1	X2	Y1	Y2	Y3	M
H(L)650	420	700	330	435	540	M24, 48 DEEP
H(L)800	560	940	360	500	640	M24, 48 DEEP
H(L)1000	700	980	485	625	765	M24, 48 DEEP

Dimensions H90-H1000

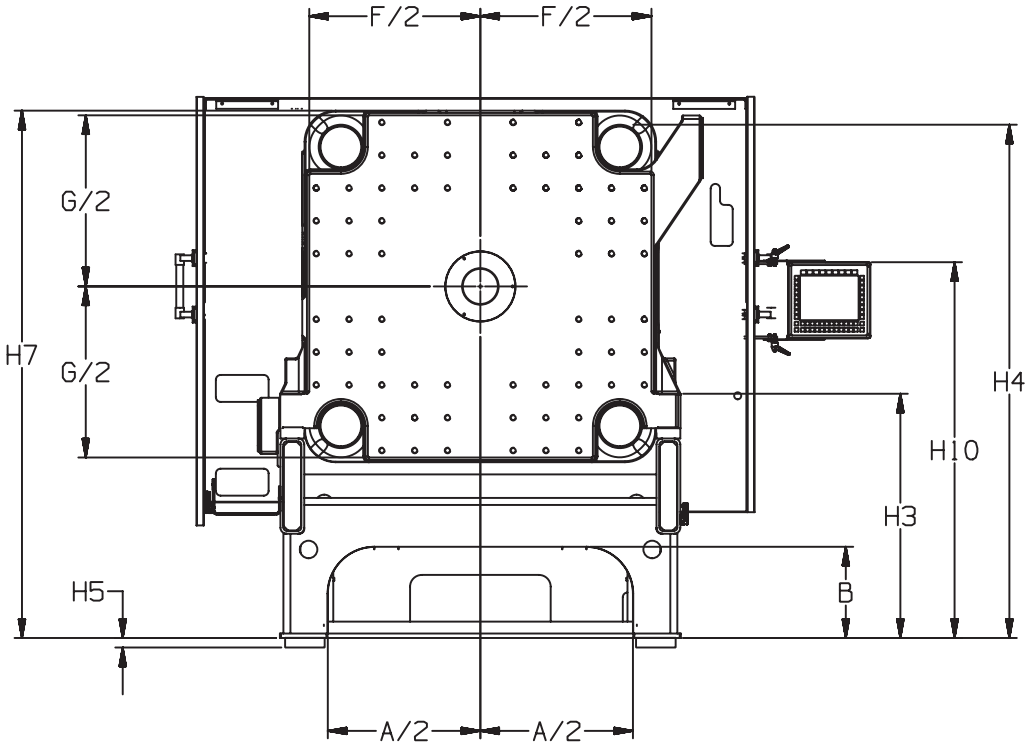

Clamp	H3*	H4*	H5 +/-17	H7SP*	H7MP*	H10*	A	B*	F	G
H90/120	1146	1685	81	1720	1720	1660	515	593	730	730
HL120	1146	1685	81	1720	1720	1660	515	593	730	730
H160	1107	1730	81	1765	1765	1660	630	593	820	820
HL160	1107	1730	81	1765	1765	1660	630	593	820	820
H225	1225	1945	81	1995	1990	1610	700	713	970	970
HL225	1225	1945	81	1995	1990	1610	700	713	970	970
H300	1192	2025	81	2075	2075	1610	800	625	1130	1130
HL300	1192	2025	81	2075	2075	1610	800	625	1130	1130
H400	1112	2115	81	2185	2165	1610 / 1412	1152	389	1330	1330
HL400	1112	2115	81	2185	2165	1610 / 1412	1152	389	1330	1330
H500	1075	2185	81	2250	2250	1610 / 1412	1302	389	1460	1460
HL500	1075	2185	81	2250	2250	1610 / 1412	1302	389	1460	1460
H650	1075	2260	60	2275	2280	1585 / 1285	1380	515	1550	1550
HL650	1075	2260	60	2275	2280	1585 / 1285	1380	515	1550	1550
H800	1000	2325	60	2350	2350	1585 / 1285	1590	505	1750	1700
HL800	1000	2325	60	2350	2350	1585 / 1285	1590	505	1750	1700
H1000	940	2400	65	2420	2450	1585 / 1285	1870	405	2070	1840
HL1000	940	2400	65	2420	2420	1585 / 1285	1870	405	2070	1840

Notes: *Add vibration mount height (H5) for height above ground.
*Height may be increased using optional machine risers.
SP = Stationary Platen.
MP = Moving Platen.

All dimensions are in [mm].

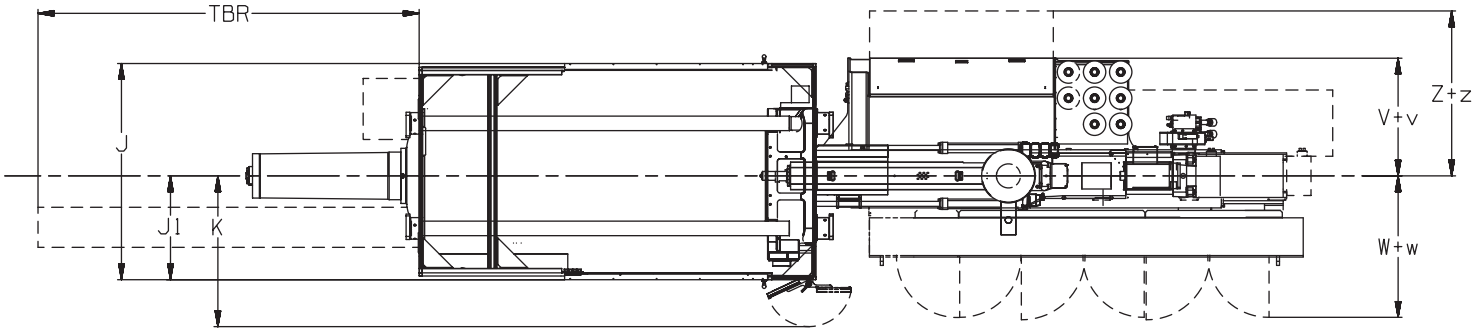

Clamp	J	J1	K	TBR
H90/120	1437	645	1151	2329
HL120	1437	645	1151	2729
H160	1580	710	1154	2487
HL160	1580	710	1154	2889
H225	1792	817	1341	2887
HL225	1792	817	1341	3383
H300	1988	934	1420	3199
HL300	1988	934	1420	3724
H400	2203	1058	1536	3742
HL400	2203	1058	1536	4423
H500	2382	1170	1665	4053
HL500	2382	1170	1665	4838
H650	2790	1290	1650	4705
HL650	2790	1290	1650	5330
H800	3030	1410	1770	5195
HL800	3030	1410	1770	5795
H1000	3350	1570	1930	5765
HL1000	3350	1570	1930	6365

Injection	V	W	Z
RS22	884	1522	1136
RS28	884	1522	1136
RS35	884	1522	1136
RS40	884	1522	1136
RS45	884 +v	1522 +w	1136 +z
RS55	884 +v	1522 +w	1136 +z
RS65	1064	1551	1587
RS80	1200	1466	1680
RS95	1200	1466	1680
RS115	1213	1466	1701
RS135	2085	1550	2685
RS155	2085	1550	2685

Clamp	Injection	Machine Base	v	w	z
H90, H(L)160	All	mono	0	0	0
H(L)225, H(L)300	RS45, RS55	split	197	29	391
H(L)225 to H(L)500	RS65	split	0	0	0
H(L)225 to H(L)1000	RS 80 to RS155	split	0	0	0

Notes: All dimensions are in [mm].

Features

Standard Clamp Features
Hydro-mechanical 3 platen clamp
Moving platen linear guide bearings for clean molding environment (H90 - H500)
Moving platen roller bearings for clean molding environment (H650 - H1000)
Wide tiebar spacing
Multi-step clamp opening and closing speed profile
Mold break force up to 10% of clamp tonnage
Closed loop mold protection pressure control
Closed loop clamp force control
Euromap, SPI or JIS mold mounting pattern (partial SPI on H650-HL1000)
Regenerative mold stroke hydraulics for improved energy efficiency
Euromap robot mounting pattern (H650 - H1000)
Husky robot mounting pattern (H90 - H500)

Optional Clamp Features
Hydraulic ejector with 3 zones of ejector speed and force control from operator interface
Mechanical clamp movement safety device (safety drop bar). Note: mandatory in some locations
Quick mold change (H650 - HL1000)
Configurable mold cooling options
Hydraulic valve gate (sequential control for multiple circuits)
Pneumatic valve gate (sequential control for multiple circuits)
High flow air valves (H300-HL1000)
Air valve packages
Air reservoirs
Pneumatic mold functions for pneumatic core or stripper plate operation
Stack mold carrier (HL models)
Programmable hydraulic functions with pressure limiting and flow control from operator interface
Light curtain for part discharge area
T slot mold mounting (H650 to H1000)

Standard Injection Features
Robust in-line injection unit design, ideal for high speed injection
Accumulator assisted injection (H90 - H500)
Barrel support (RS45 and above)
Injection swing for ease of screw and barrel access (RS22-RS115)
Bi-metallic lined barrel (A110, or Xaloy 102, or eq.) and wear resistant screw tip overlay (Colmonoy 56 or eq.)
Manual quick barrel change
Mineral insulated heater bands
Ball check valve
Automatic carriage sequence controls for sprue break and stack molds
Carriage forward before, during or after clamp up
Manual proportional carriage force control
Screw pullback before and/or after injection
Adjustable screw pullback speed from the operator interface
Cold screw start protection
Water cooled feedthroat
Selection of resin specific screw designs
Second hopper position for easy emptying
Purge guard with safety interlocked access

Optional Injection Features
High speed accumulator assisted injection
Shut-off nozzle
Additional nozzle adapter heat zone
Power assisted injection swing (RS135 - RS155)
Ring check valve
Screen adjustable proportional carriage force
Powered hopper shutoff
Polycarbonate or pail resin screw (RS80 - RS155)
High wear protected barrel and screw (Bi-metal barrel AC330, Colmonoy 83 reinforced screw flights)
Transition injection to hold by cavity pressure
Hopper drawer magnet
Hopper with minimum level monitoring
High power, high torque or high speed screw drives
Injection unit access platform

Standard Controls Features
Industrial PC machine control with Windows™ style operator interface
Data storage on 3 1/2" diskette and hard drive
Solid state heater relays
Ultrasonic non-contact position transducers on clamp injection unit and ejector, 5 micron resolution
Flat panel colour operator interface, touch screen
Sealed electric cabinet with internal air circulation fan
Star delta motor starter
Hour meter
Ports for parallel printer, external keyboard and mouse, external screen, ethernet, and modem
Closed loop control of injection speed, hold pressure, back pressure, and fill pressure limiting
10 step injection speed profile
10 step recovery speed and back pressure profiles
10 step hold pressure profile
Graphical display of injection speed, injection pressure, clamp pressure, platen speed
Cushion control and monitoring
Transition injection to hold by position, time, hydraulic pressure
Screens in English and one other world language with on-line language switching
Imperial and metric units with on-line switching
Set and actual parameters in engineering units
Explicit alarm descriptions with on-line help
Save / recall of over 1000 machine setups with set-up transfer on 3.5" diskette
Cycle time, highest priority alarm, clock & machine status on every screen
Setpoint limit checking
Multi-level password protected data entry
Troubleshooting screens
Machine events (20000) and downtime reports
Storage of process values (10000 cycles)
Machine and mold heat scheduling
Timer based, automatic heat reduction if machine stops
Production counter with completion alarm

Optional Controls Features
SPC/SQC software package with analysis and alarms (20000 cycles)
Set point change reason reporting
Energy consumption measurement (H650-H1000)
Husky robot controls integrated with machine controls
Integrated mold heat control packages
High ambient temperature package
Power outlet package
Mixer blender outlet
Euromap 12 or SPI robot interface
Host computer interface
SPI or Euromap 17 auxilliary device interface
Gas injection unit interface
Injection compression
Mold coding interface
End of arm tool coding interface
Cavity pressure sensing package, including fill to hold transfer criteria
Machine integrated hotrunner temperature controls (includes individual tolerance band and softstart)
Photo eye part detection
Dual photo eye part detection
Audible alarm

Features

Standard Hydraulic Features
Independent servo valve control of clamp tonnage, mold stroke and injection
Variable displacement pumps
High efficiency water cooled drive motor
Noise reducing fully enclosed power pack
Face-seal fittings
Quick connector on filter for oil filling
High flow bypass oil filtration (3 micron) with pressure drop monitoring
Oil level monitoring
Closed loop oil temperature control
Oil preheating
Hydraulic hose restraints on pressure lines
Mold services identified with nameplates
High and low oil temperature alarm
High oil temperature pre-alarm
Pressurized oil tank for minimum contamination
Centralized oil collection and recovery system
Quick connectors for hydraulic gauge (supplied) at key hydraulic test points

Optional Hydraulic Features
Hydraulic supply for customer requirements

Standard General Features
37 month parts and 13 month labor warranty
37 month leak free hydraulics warranty
Electric extruder drive (RS22-RS95)
Electric extruder drive (H400 to HL500 with RS115)
Hydraulic extruder drive (H650 to HL1000 with RS115 to RS155)
Simultaneous operation of clamp, ejector, cores and plasticizing functions (H90-HL500)
Simultaneous operation of clamp, ejector, cores and plasticizing functions (H650 to HL1000 with RS 80 to RS95)
Machine built to CE or ASME/UL/OSHA/NFPA safety standards

Optional General Features
Electric extruder drive (H650-HL1000, RS115 and RS135)
Simultaneous operation of clamp, ejector, cores and plasticizing functions (H650 to HL1000 with RS 115 to RS155)
Machine risers for increased part clearance (H400-HL1000)
Special colour

Notes

Robots

		Tracer TSA			Tracer TMA			Tracer TMB		
Typical machine size		H90-H300			H225-H1000			H1000		
Payload	kg	3 / 6 / 14[6]			7 / 14 / 20			35		
In/Out Time	s	0.45 / 0.55 / 0.75[1]			0.65 / 0.90 / 1.15[2]			1.4[3]		
Minimum Dry Cycle	s	4.3			5.5			12		
Tooling Plate Repeatability	mm	±0.5			±0.5			±0.5		
Linear Axes		**X-axis**	**Y-axis**	**Z-axis**	**X-axis**	**Y-axis**	**Z-axis**	**X-axis**	**Y-axis**	**Z-axis**
Available Strokes	mm	500	950	1500	800	1400	2500	1200	1800	3200
			1400	1900	1200	1800	3000	1800	2400	4000
						2400	3500			5000
							4000			8000 In-line
							7500 In-line			10 000 In-line
							9000 In-line			7000 Dual In-line
							7000 Dual In-line			9000 Dual In-line
							8500 Dual In-line			
Rotary Axes		**Pneumatic C-axis**			**Pneumatic C-axis**			**Pneumatic C-axis**		
Rotation Angle	Degrees	90			90			90		
Torque @ 90psi	Nm	50			50 / 80[5]			142		
		Pneumatic A-axis[4]			**Pneumatic A-axis[4]**			**Pneumatic A-axis[4]**		
Rotation Angle	Degrees	90 or 180			90 or 180			90 or 180		
Payload with A-axis option[4]	kg	3 / 7			4 / 7 / 13 / 20[7]			20		
					Servo A & C-axis[4]			**Servo A & C-axis[4]**		
Rotation Angle	Degrees				360 (A-axis) & 180 (C-axis)			360 (A-axis) & 180 (C-axis)		
Payload with A-axis option[4]	kg				14			20		

Notes:
(1) 500mm stroke in, 700mm stroke out, trigger clamp close at 500mm
(2) 650mm stroke in, 1000mm stroke out, trigger clamp close at 650mm
(3) 1000mm stroke in, 1300mm stroke out, trigger clamp close at 1000mm
(4) Option will reduce payload rating
(5) 50 Nm for 7kg and 14kg; 80 Nm for 20kg
(6) 14kg payload available with telescopic vertical axis option
(7) Payload obtained by adjusting tuning parameters

Standard Features
37 month parts and 13 month labour warranty
Integrated PC-based controls with remote cabinet and teach pendant
Servo drives for the linear (X,Y,Z) axes
SERCOS control interface for servo drives
Absolute encoders for servo motors
Remote connectivity
Water cooled cabinet
Hot swap teach pendant connection (on cabinet, integrated robots only)
Part placement on non-operator side of machine
Single stage vertical axis (TSA robot)
Telescopic vertical axis (TMA and TMB robots)
Pneumatic C-axis, 0-90°
EOATool pneumatics: 2 vacuum, 4 air
EOATool I/O: 2 outputs & 6 inputs (TSA and TMA robots) or 8 inputs (TMB robots)
I/O for Peripheral Handling Equipment (PHE) (32 pin connector)
Floating axis
Stacking and palletizing routines
Program templates
Perimeter guard interlock kit
Belt tensioning kit
Base spacer to stationary platen

Optional Features
Part placement on operator side of the machine (TMA and TMB robots)
In-line or dual carriage in-line (TMA,TMB) for part placement behind clamp
Twin arm side discharge configuration (TMA robot)
Stand-alone PC-based controls with upgraded pendant and remote connectivity
Pneumatic A-axis
Servo C-axis (TMA and TMB robots)
Servo A & C-axis (TMA and TMB robots)
Telescopic Vertical Axis (TSA robot)
EOATool pneumatics: 4 vacuum and 2 air
EOATool pneumatics: 4 vacuum and 8 air (TMB robots)
Part tracking (clamp following) (H650 machines or higher)
Synchronizing with machine ejectors (H650 machines or higher)
Remote hot swap teach pendant connection (intergrated robots only)
Perimeter guarding
Indexing conveyor with robot interface
Customized End-Of-Arm-Tool (EOAT)

Tracer TMA Robot Dimensions
(Use for 800mm X-Axis Stroke)

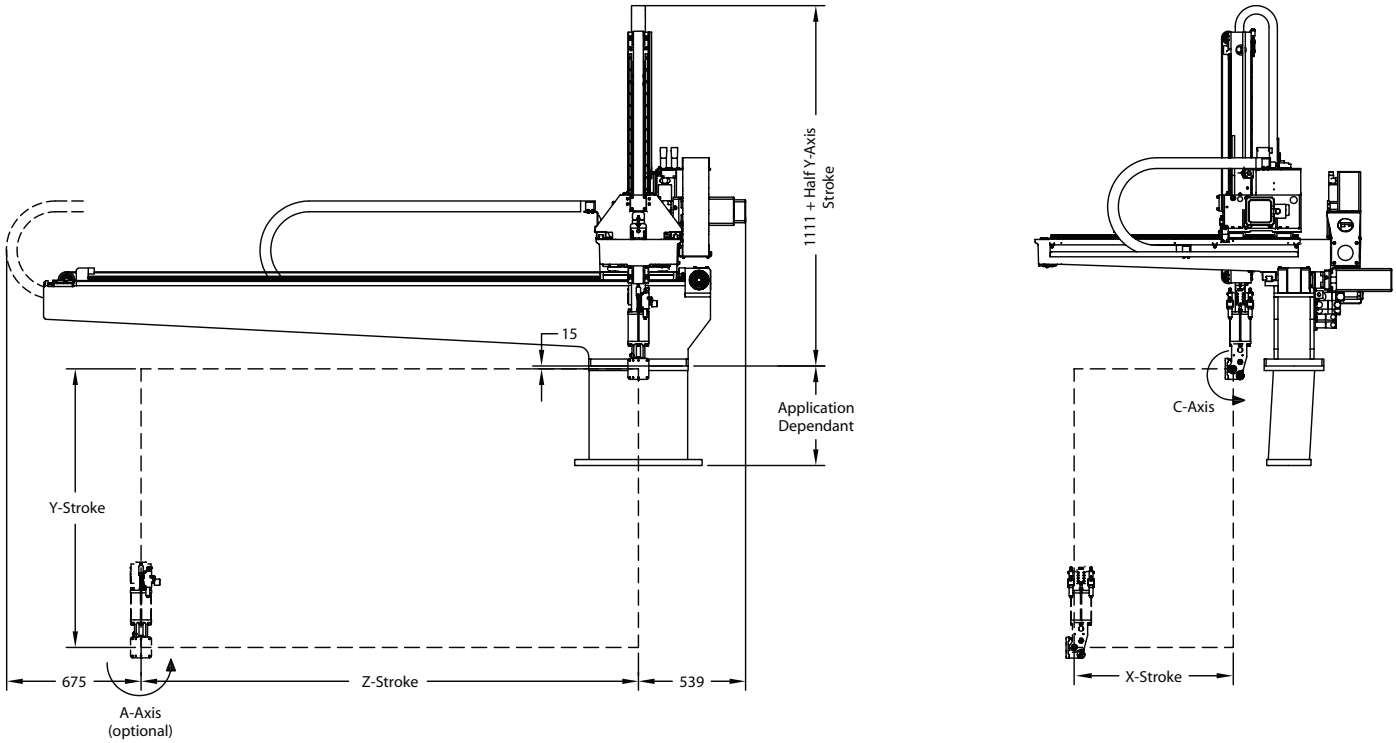

Tracer TMA Robot Dimensions
(Use for 1200mm X-Axis Stroke)

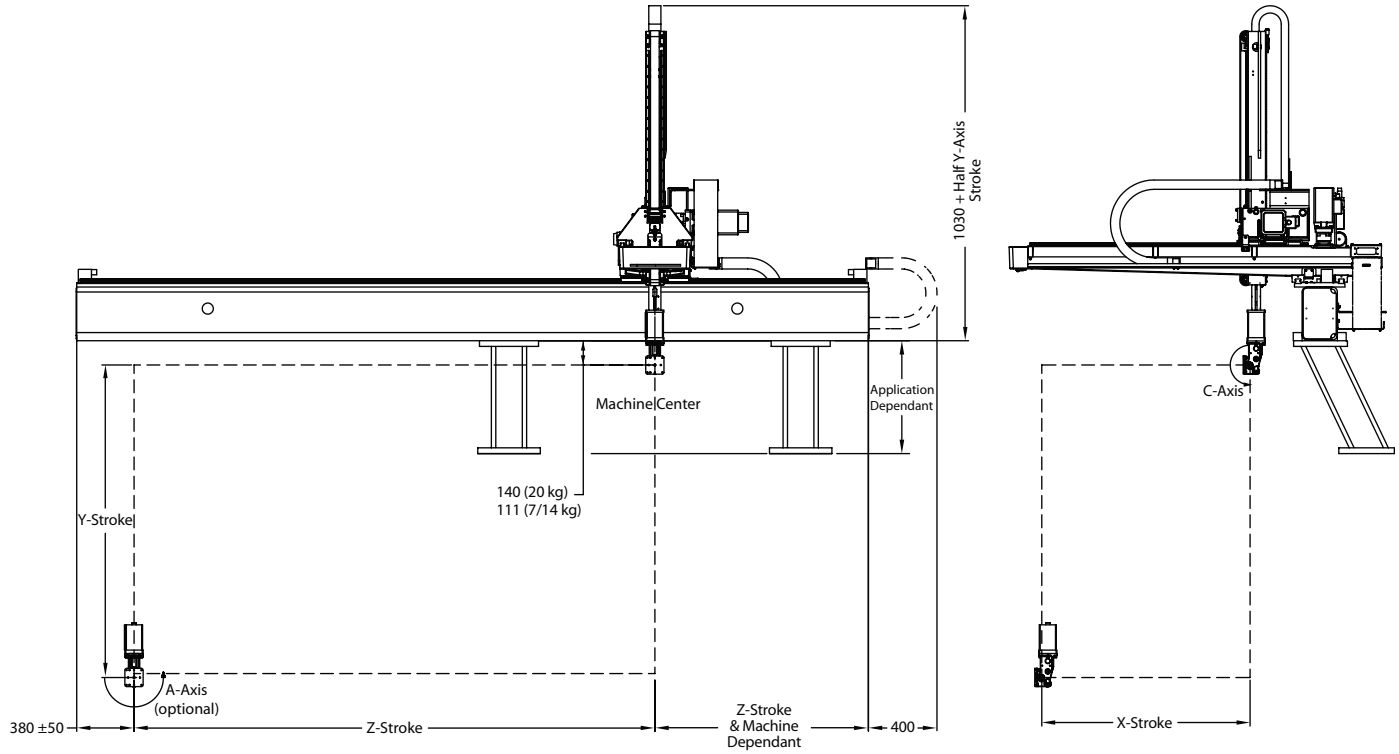

Tracer TMA Inline Robot Dimensions

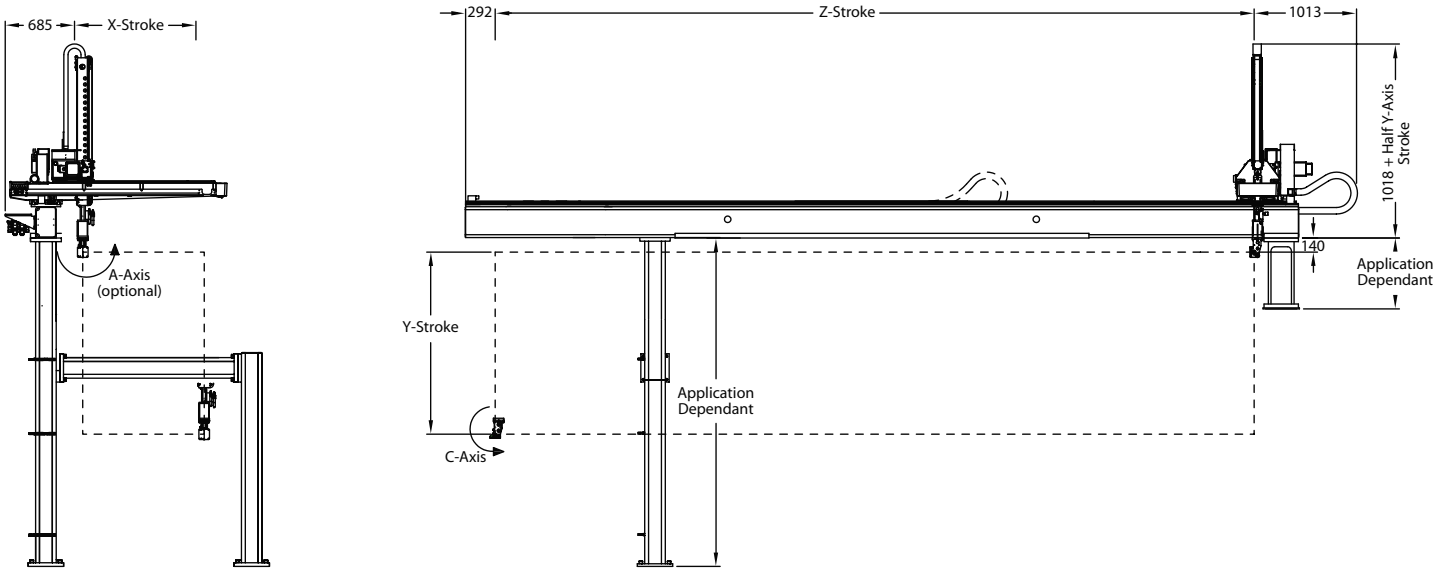

Tracer TMA Dual Inline Robot Dimensions

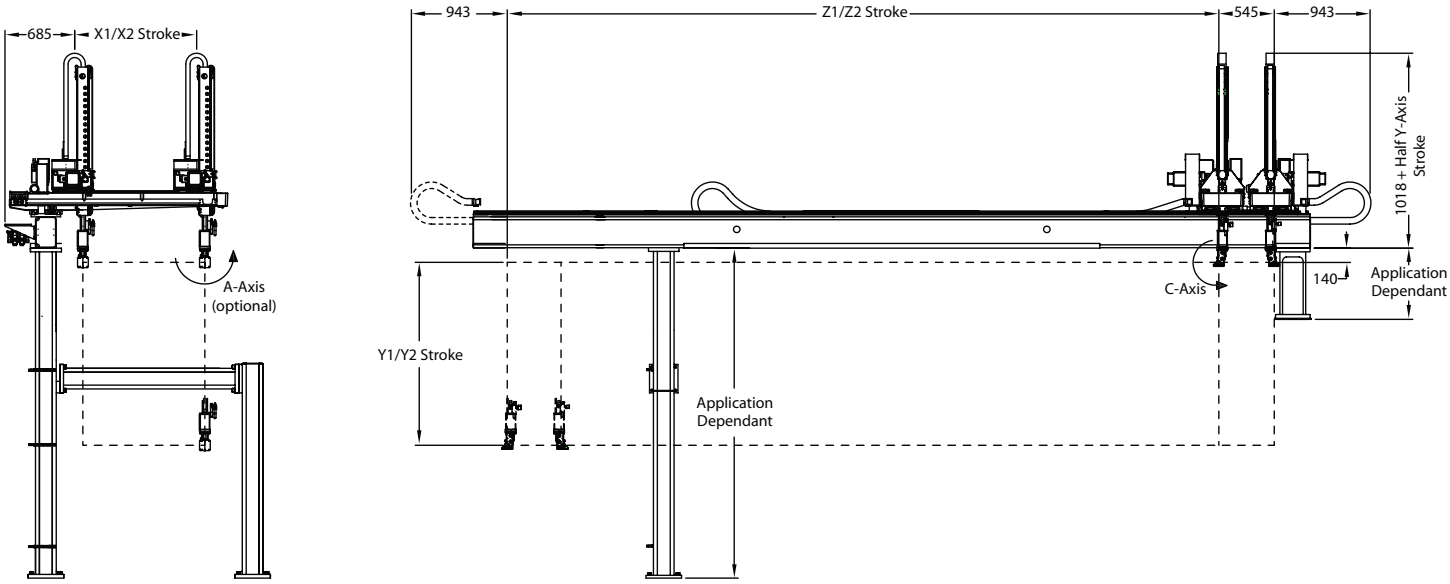

Tracer TMB Robot Dimensions

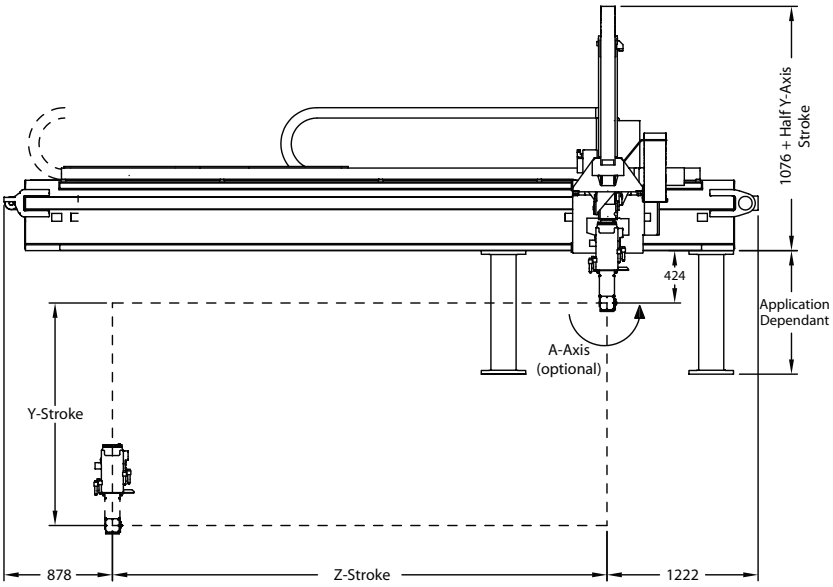

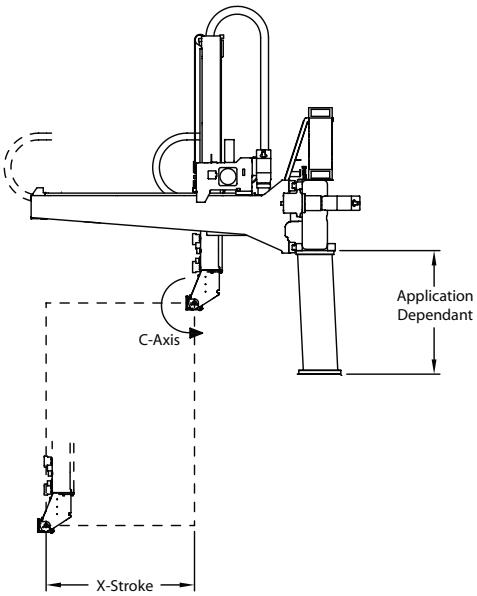

Tracer TMB Inline Robot Dimensions

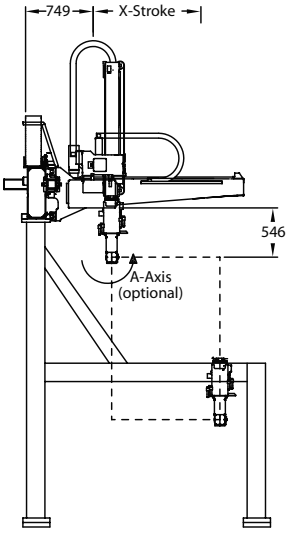

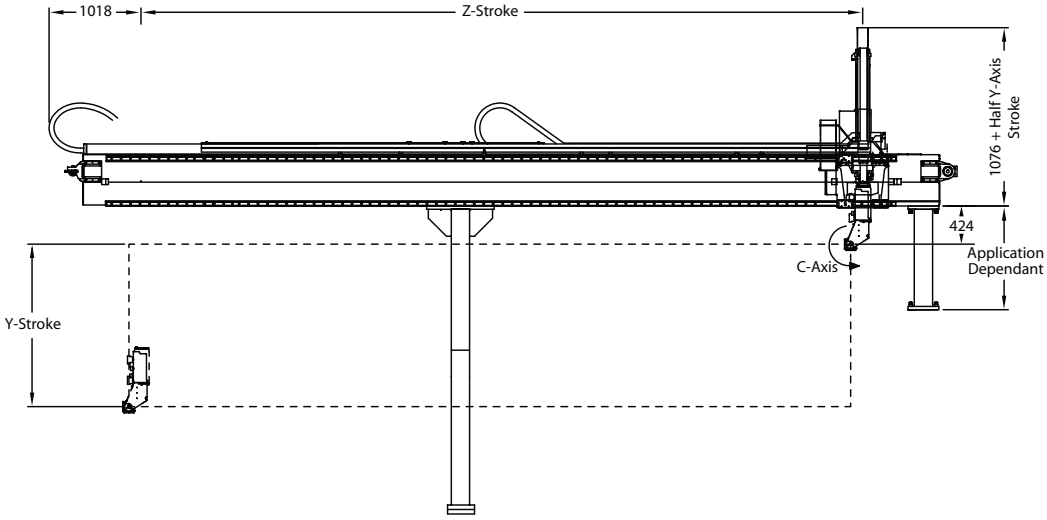

Tracer TMB Dual Inline Robot Dimensions

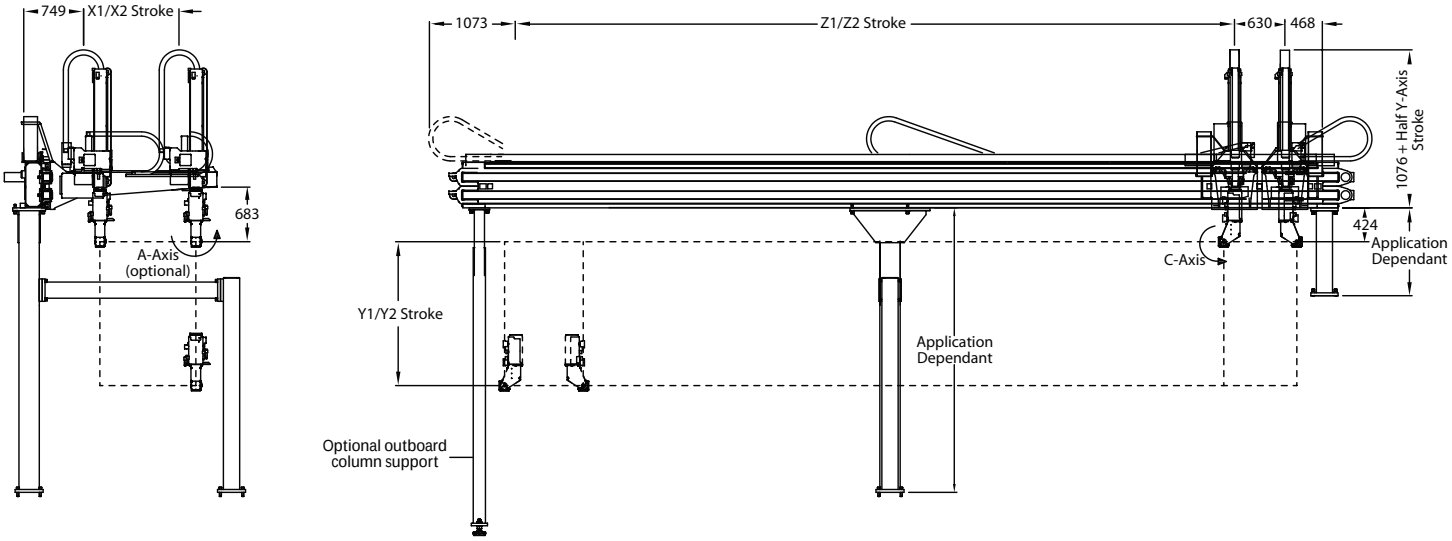

Tracer TSA Robot Dimensions

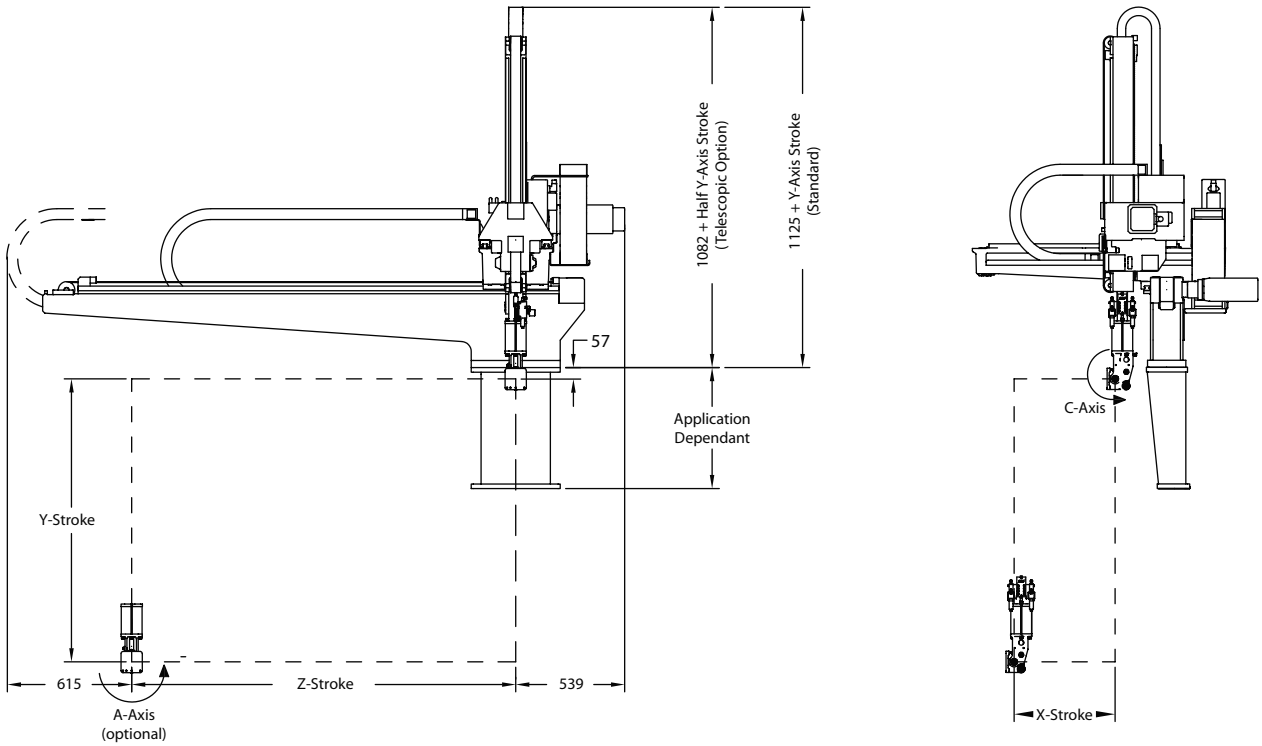

Notes

HUSKY

Keeping our customers in the lead

www.husky.ca

Head Office
500 Queen Street South
Bolton, Ontario
Canada L7E 5S5
Tel. (905) 951 5000
Fax (905) 951 5384

Asia
101 Ba Sheng Road
Shanghai Waigaoqiao
Free Trade Zone
P.R. China 200131
Tel. (86) 21 5048 4800
Fax (86) 21 5048 4900

Europe
Zone Industrielle Riedgen
Technical Center, B.P. 93
L-3401 Dudelange
Luxembourg
Tel. (352) 52 11 51
Fax (352) 52 11 5 4458

Latin America
Carlos Echanove No. 17
Colonia El Molino, Cuajimalpa
Mexico D.F.C.P. 05240
Tel. (5255) 5089 1160
Fax (5255) 5089 1161

North America
45145 West Twelve Mile Road
Novi, Michigan
USA 48377
Tel. (248) 735 6300
Fax (248) 735 6400

Hylectric Machines

560 Queen Street South
Bolton, Ontario, Canada L7E 5S5
Tel. (905) 951 5171
Fax (905) 951 5385
Email: hylectric@husky.ca

Cover: Husky customer facility with Hylectric systems that include integrated Tracer robots, hot runners and downstream part handling.

Recycled paper, containing a minimum of 20% post consumer fiber.
®/© 2004 Husky Injection Molding Systems Ltd. Printed in Canada. November 2004

Version 4.1 English Metric